Plan Commission

335 South Broadway
De Pere, WI 54115
https://www.deperewi.gov/

Regular Meeting

Agenda

Monday, October 26, 2020 **7:00 PM**

Pursuant to Wisconsin Statutes 19.84, Notice is hereby given to the public that a meeting of the **Plan Commission** of the City of De Pere will be held on **October 26, 2020** at **7:00 PM.**

Due to the current public health emergency, the meeting will be held electronically and the public may attend this meeting electronically or telephonically by accessing either:

Computer/smart phone accessing https://www.gotomeet.me/DePere
OR
You can also dial in using your phone.
United States (Toll Free): 1 866 899 4679
United States: +1 (312) 757-3117
Access Code: 154-883-285

THIS MEETING WILL NOT BE HELD IN PERSON.

This meeting may also be rebroadcast on Spectrum Cable Channel 4 and AT&T U-verse Channel 99 throughout the week and available on demand at http://deperecitywi.iqm2.com/.

Call to Order

1. Roll Call
2. Approval of the minutes of the September 28, 2020 Plan Commission meeting.
3. Consideration and possible action on a request for a site plan to add 15,005 SF to an existing building at 1881 Commerce DR (Parcel ED-344-102-1).
4. Consideration and possible action regarding a Precise Implementation Plan (PIP) for a proposed new restroom and dump station on the Brown County Fairgrounds at 1500 Fort Howard AV (Parcels WD-57, WD-67, WD-70-1).*
5. Discussion regarding the RFP process and structure alternatives for the Comprehensive Plan and Downtown Plan Updates.

Adjournment

Any person wishing to attend this meeting, who, because of disability, requires special accommodations should contact the City Planner?s office at 339-4043 by noon on the day of the meeting so that arrangements can be made.

*Items with an asterisk require City Council approval.

Agenda Sent To:
Alderpersons
City Administrator
Mayor
Department Heads

TV, Newspapers & Radio Stations
Kress Family Library
De Pere Chamber of Commerce
Chris Heyrman, Heyrman Construction
Kolocheski Thomas A & Lisa M Liv Trust of 2003
Kip Kolocheski, Kay Distributing
Matt Kriese, Brown County Parks

City of De Pere, Wisconsin

Request For Plan Commission Action

MEETING DATE:	**October 26, 2020**
DEPARTMENT:	**Planning**
FROM:	**Kelly Barker**
SUBJECT:	**Approval of the minutes of the September 28, 2020 Plan Commission meeting.**

ATTACHMENTS:

- PC_Sep2020_Minutes_Draft (PDF)

Plan Commission

335 South Broadway
De Pere, WI 54115
https://www.deperewi.gov/

Regular Meeting

Draft Minutes

Monday, September 28, 2020 **7:00 PM**

Call to Order

The meeting was called to order at 7:00 PM by Alderperson Dean Raasch

Attendee Name	Title	Status	Arrived
James Boyd	Mayor	Excused	
Derek Beiderwieden	Commissioner	Present	
Brenda Busch	Commissioner	Present	
Dan Carpenter	Alderperson	Present	
Mark Higgins	Commissioner	Present	
Dean Raasch	Alderperson	Present	
Grant Schilling	Commissioner	Present	

Also in attendance: Development Services Director Daniel Lindstrom, City Planner Peter Schleinz, and members of the public.

2. Approval of the minutes of the August 24, 2020 Plan Commission meeting.

RESULT:	**ADOPTED [UNANIMOUS]**
MOVER:	Brenda Busch, Commissioner
SECONDER:	Mark Higgins, Commissioner
AYES:	Beiderwieden, Busch, Carpenter, Higgins, Raasch, Schilling
EXCUSED:	James Boyd

3. Discussion and possible action on a request to amend the 2010 City of De Pere Comprehensive Plan Update to change the Future Land Use (Figure 2-6) from 'Institutional/Governmental Facilities' to 'Commercial' at the east end of a parcel addressed at 347 Libal ST (ED-649-H-3-2), but generally located along Chicago Street.*

RESULT:	**NO ACTION**

A. Staff Report and Presentation.

City Planner Peter Schleinz reviewed the request to amend the 2010 City of De Pere Comprehensive Plan Update to change the future land use from Institutional/Government Facilities to Commercial in order to land divide, rezone, and develop a site plan for a future auto parts store at 347 Libal Street. The petitioner held a neighborhood meeting on September 8, 2020. A copy of the public hearing notice was mailed to all property owners within 300 feet of the parcel. A total of six emails in opposition of the development were sent to staff. Peter noted that the petitioner is present to answer questions. Grant Schilling moved, seconded by Brenda Busch, to open the meeting. Upon vote, motion carried unanimously. Steve Bruggeman with JSD Professional Services represented the petitioner. Ald. Raasch asked if any Plan Commission members had any questions for the petitioner. No one did. Eric Miller with St. Anne's Episcopal Church stated his support of the project, noting that it will bring additional employment to the community. Terri Hendricks, a local resident who lives on Martinwood Ct spoke next. She gathered the signatures for the petition in opposition of the development. Glen Strebel, another neighbor asked what other uses could be used for the land if the amendment request was denied. Peter stated that the land is currently zoned R-1, single family residential. Other developments that would be permitted uses include single

family housing, schools, religious institutions and daycares. Derek Beiderwieden moved, seconded by Brenda Busch to go back to regular session. Upon vote, motion carried unanimously. Ald. Raasch stated that the majority of properties across the street are commercial already and doesn't agree that one more commercial property in the area will increase traffic significantly. Ald. Carpenter added that he is in agreement with Ald. Raasch's comments. Mark Higgins stated that he is not in agreement with approving the amendment, based on the concerns of the people in the neighborhood - traffic, signage, lighting. Brenda Busch moved, seconded by Ald. Carpenter, to open the meeting.
Upon vote, motion carried unanimously. Maria Grishina, the authorized agent for the petitioner, addressed the Commission. She added that additional landscaping screening, trees & hedges along the rear property line will help to screen the property from the neighborhood. She added that an auto parts store is needed in the area, and would bring at least 8-10 new jobs to the City and help increase the tax base. Terri Hendricks stated that she is still in opposition to the project. Ald. Carpenter moved, seconded by Ald. Raasch, to go back to regular order. Upon vote, motion carried unanimously. Development Services Director Daniel Lindstrom clarified that there are four different options available to the Plan Commission:
1. Approve resolution and forward the request to Common Council.
2. Deny request and forward denial recommendation to Common Council.
3. Table request for a later Plan Commission meeting, possibly because additional information and/or discussion is needed.
4. Other.
He added that both Plan Commission and Council need to approve the amendment in order for it to be approved; one cannot act independently of the other.

RESULT:	**NO ACTION**

B. Resolution PC20-04: Recommending Amendment #1 of the 2010 City of De Pere Comprehensive Plan Update.

RESULT:	**NO ACTION**

C. Action by the Plan Commission.

Ald. Raasch moved to approve Resolution PC #20-04, recommending amendment #1 of the 2010 City of De Pere Comprehensive Plan Update, seconded by Ald. Carpenter. Upon vote, motion carried by a vote of 5-1.

RESULT:	**ADOPTED [5 TO 1]**
MOVER:	Dean Raasch, Alderperson
SECONDER:	Dan Carpenter, Alderperson
AYES:	Beiderwieden, Busch, Carpenter, Raasch, Schilling
NAYS:	Mark Higgins
EXCUSED:	James Boyd

4. Staff recommendation and possible action regarding a proposed extraterritorial 2 lot certified survey map, with right-of-way dedication, at the 2800 BLK Lawrence DR in the Town of Lawrence (Parcels L-472, L-473).*

City Planner Peter Schleinz reviewed the 2-lot extraterritorial CSM in the Town of Lawrence. Staff recommended approval of the CSM, subject to the conditions outlined in the report. Grant Schilling moved, seconded by Derek Beiderwieden, to approve the CSM. Upon vote, motion carried unanimously.

RESULT:	**ADOPTED [UNANIMOUS]**
MOVER:	Grant Schilling, Commissioner
SECONDER:	Derek Beiderwieden, Commissioner
AYES:	Beiderwieden, Busch, Carpenter, Higgins, Raasch, Schilling
EXCUSED:	James Boyd

5. Staff recommendation and possible action regarding a site plan request to expand a parking lot, modify loading docks and remove part of a street fronted berm for a new driveway, at 2107 American BL (Parcel WD-1042).

   City Planner Peter Schleinz reviewed the site plan request to expand a parking lot, modify loading docks, and remove part of a berm at 2107 American Boulevard. Staff recommend approval of the site plan, subject to the conditions outlined in the report. Mark Higgins moved, seconded by Brenda Busch, to approve the site plan request. Upon vote, motion carried unanimously.

RESULT:	**ADOPTED [UNANIMOUS]**
MOVER:	Mark Higgins, Commissioner
SECONDER:	Brenda Busch, Commissioner
AYES:	Beiderwieden, Busch, Carpenter, Higgins, Raasch, Schilling
EXCUSED:	James Boyd

6. Staff recommendation and possible action regarding a site plan request for a new 18,200 SF industrial building with a parking lot at 1899 Commerce DR (Parcel ED-344-102-5).

   City Planner Peter Schleinz reviewed the site plan request for a new industrial building and parking lot at 1899 Commerce Drive. The use of architectural and metal paneling requires Plan Commission approval. Staff recommended approval of the site plan, subject to the conditions in the report. Derek Beiderwieden moved, seconded by Mark Higgins, to approve the site plan, including the use of metal paneling. Upon vote, motion carried unanimously.

RESULT:	**ADOPTED [UNANIMOUS]**
MOVER:	Derek Beiderwieden, Commissioner
SECONDER:	Mark Higgins, Commissioner
AYES:	Beiderwieden, Busch, Carpenter, Higgins, Raasch, Schilling
EXCUSED:	James Boyd

7. Staff recommendation and possible action regarding an ordinance to amend Municipal Code Chapter 46 (Platting and Division of Land), related to applicability to condominiums.*

   City Planner Peter Schleinz reviewed the request to amend Municipal Code Chapter 46, relating to condominium plats. The change will allow the City to review condominium plats, along with Brown County Planning. Staff recommended approval of the ordinance amendment. Derek Beiderwieden moved, seconded by Ald. Raasch, to approve the request. Upon vote, motion carried unanimously.

RESULT:	**ADOPTED [UNANIMOUS]**
MOVER:	Derek Beiderwieden, Commissioner
SECONDER:	Dean Raasch, Alderperson
AYES:	Beiderwieden, Busch, Carpenter, Higgins, Raasch, Schilling
EXCUSED:	James Boyd

Adjournment

Brenda Busch moved, seconded by Derek Beiderwieden, to adjourn the meeting at 8:08 pm. Upon vote, motion carried unanimously.

Respectfully submitted,
Kelly Barker

City of De Pere, Wisconsin

Request For Plan Commission Action

MEETING DATE:	**October 26, 2020**
DEPARTMENT:	**Planning**
FROM:	**Peter Schleinz**
SUBJECT:	**Consideration and possible action on a request for a site plan to add 15,005 SF to an existing building at 1881 Commerce DR (Parcel ED-344-102-1).**

ATTACHMENTS:

- 10-26-20 PC Report - Kay Distributing(DOCX)
- Application Form - Site Plan (PDF)
- Site Plan - PRELIMINARY - 21 Sep 2020 (PDF)

Item 3: **Consideration and possible action on a request for a site plan to add 15,005 SF to an existing building at 1881 Commerce DR (Parcel ED-344-102-1).**

SITE MAP

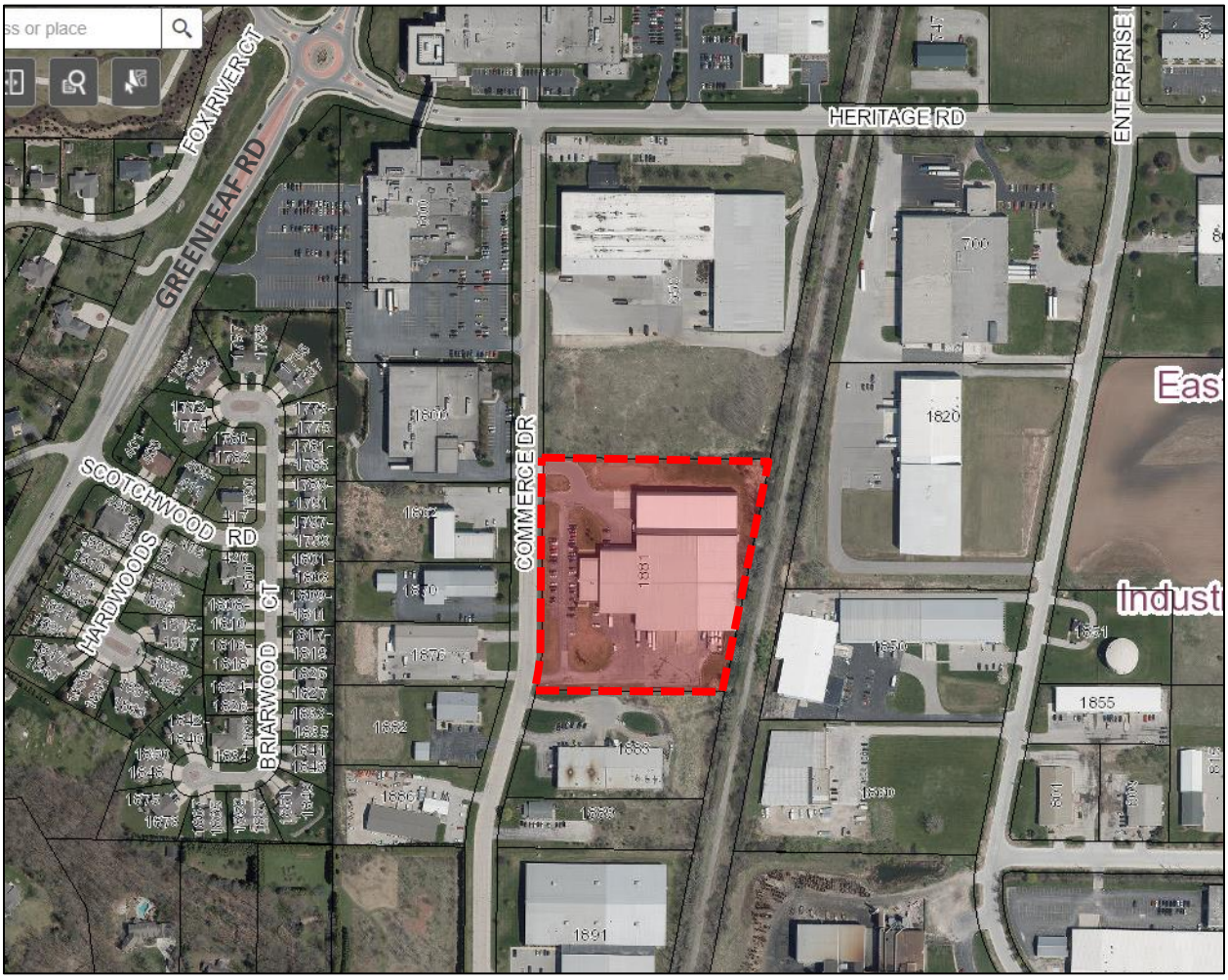

REQUESTED ACTION: Site Plan Approval.

Kay Beer Distributing INC site plan for a 15,005 SF building addition at the north end of the property.

NOTE: The proposed addition is located 20 feet from the interior side yard setback instead of 25 feet. A variance review will be completed by the Board of Appeals on October 26, 2020.

COMMON DESCRIPTION: 1881 Commerce DR, located south and east from the Commerce DR and Heritage RD intersection.

PARCEL NUMBERS: ED-344-102-1

EXISTING ZONING: I-3 General Industrial District)

SURROUNDING LAND USES: Industrial (I-3) to the north, south, and west.

Industrial (I-1) and Fox River State Recreational Trail (R-1) to the east.

COMPREHENSIVE PLAN: Industrial Park

APPLICANT / OWNER:

Chris J. Heyrman, Architect Authorized Representative Heyrman Construction CO INC PO BOX 2804 Green Bay, WI 54324-8046	Kolocheski Thomas A & Lisa M Liv Trust of 2003 Property Owner 1826 Hawthorne Heights De Pere, WI 54115

SITE HISTORY: After a review of air photographs dating to 1938, the property has been used for agricultural purposes until the original site plan was approved in 1994. There were building modifications and expansions in 1996, 2004, and 2017.

On September 21, 2020 an authorized representative for the property owner proposed a 15,005 SF building expansion at the north end of the existing building.

STAFF REVIEW: When reviewing a Site Plan request, staff considers the future land use recommendation of the Comprehensive Plan, surrounding land uses, and desired development patterns, as well as the criteria identified in Zoning Code Section 14-60.

The 15,005 SF building addition will extend a building addition that was reviewed by Plan Commission in 2017. During the 2017 review, the Plan Commission considered similar building façade materials and colors on the front, side, and rear of the building.

The façade materials include white metal wall panels on the front, side, and rear of the addition. The front façade also has a 7' CMU knee wall that is designed to match the addition to the south from 2017.

- The use of metal on the side and rear may be considered on the I-3 District zoned property if approved by Plan Commission.
- Plan Commission may consider allowing the use of architectural panels on front facades when it breaks up the mass of a façade and/or appears to be made of a textured concrete or masonry.

There are no new driveways, parking lots, or loading docks proposed to accommodate the expansion as it is warehouse space that will be accessed internally through the existing building. The expansion does not increase the number of employees.

The landscaping plan includes a requirement for 30 trees. The property has several trees growing naturally along the Fox River State Recreational Trail, but the existing "as-is" landscaping near the street does not appear to reflect all landscaping from the approved 2017. However, the new site plan accommodates an additional 13 trees and 3 shrubs at the front of the building to accommodate the need for landscaping on the property.

No new signage was proposed as part of the site plan review. The existing building has wall signage on the front facade.

The site plan complies with the following massing and setback requirements set by the I-3- District (Code Section 14-49):

- Land Use: Warehouse (permitted)
- Lot Size: 6.9 acres (no minimum required)
- Front Yard Setback - west: ~90' (25' required)
- Interior Side Yard Setback – north & south: ~20' & 185'' (25' required)
    - *Note: A variance is being petitioned for the interior side yard setback.*
- Rear Yard Setback - east: ~15' (25' required)
    - *Note: Existing rear yard setback predates current 25' setback requirement.*
- FAR: 0.4 (3.0 or less required)
- Building Height: ~30' (35'-75' maximum)
- Landscaping: 13 new trees added (30 trees required) additional trees exist naturally along rear property line, along Fox River State Recreational Trail.

Parking requirements appear to have been met for the development with a 55 stall parking lot. A total of 40 stalls are required; 30 stalls are required for office space and 10 stalls are required for employees in the warehouse space. The below chart summarizes the existing and proposed stalls to be added and the required stalls:

LOCATION	EXISTING	ADDED	REQUIRED	CRITERIA MET?
Office: 4 spaces per 1,000 SF	30	0	30	Yes
Warehouse: 1 space per employee + Visitors.	25	0	10	YES
TOTAL	**55**	**0**	**40**	**YES**

Proposed site plan with existing landscaping from 2017 review:

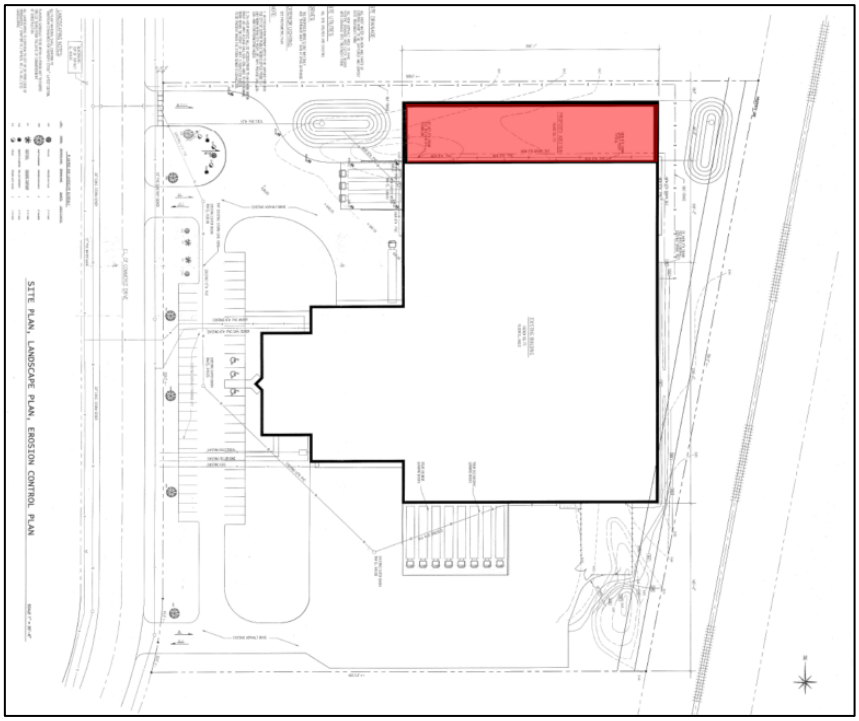

Building addition front façade:

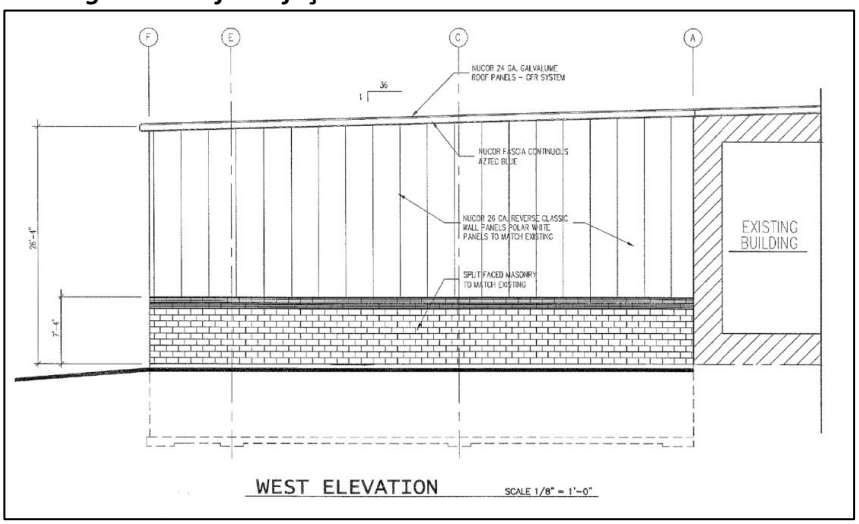

All new building elevations:

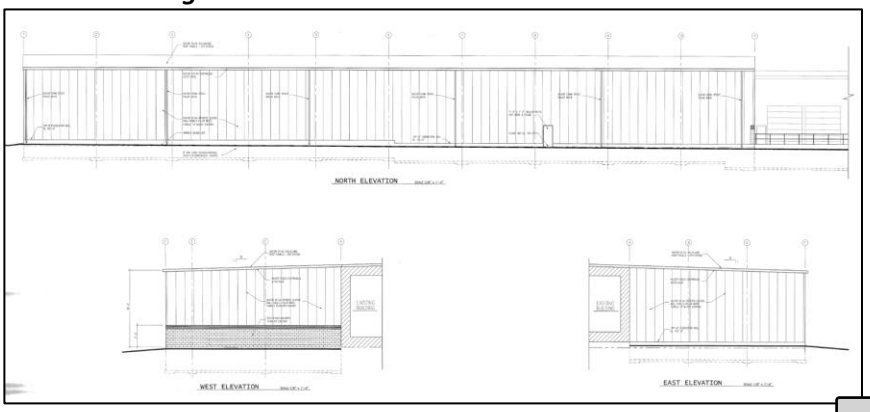

STAFF COMMENTS:

Engineering:

1. There is a new building addition and the stormwater management pond is being altered/reduced due to the new building addition. Provide a new stormwater management plan showing the site's TSS reduction and outflow quantity. TSS reduction should be 80% for both the 2017 addition and the proposed addition areas. The existing structure and parking lot areas, predating 2009 would not need to be treated to 80%. Flow rate off the site should not exceed the pre-existing flow rate.
2. A new stormwater maintenance agreement will be required for proposed stormwater management facilities. The City will provide a draft of the agreement for the developer to fill out. The agreement will be sent to Brown County for recording on this parcel.
3. Record drawings / as-built will need to be provided for the updated storm sewer maintenance facilities as well as an Engineer's certificate of final construction's compliance to the plans.
4. Provide site address on the plan cover.
5. Clarify changes to site lighting. Provide a photometric plan as referenced on sheet A-1.
6. Show existing and proposed contours. The contours provided are from the previous site plan submittal in 2017. The pond is drawn in without referencing any elevations. Contours need to be a minimum of 2-foot.
7. Are the notes needed on the left side of sheet A-1? Is any work proposed within the City right-of-way?
8. Provide owner information.
9. Provide full property boundary information including bearings.
10. Provide erosion control plans. Inlet protection type D is required on street inlets.
11. Clearly identify if any utility work is proposed on the site plan.
12. Provide WisDNR soil loss/sediment discharge calculations with a corresponding map.

Fire: None.

Forestry: None.

Health: None.

Planning:

1. The front façade is a white wall panel with a 7-foot CMU knee wall, designed to match the existing building façade. The use of paneling on the front façade requires Plan Commission approval.
2. The side and rear of the building are 100% white wall panel, which may be permitted in the I-3 zoning district if approved by Planning Commission.
3. The building is located 20' from the side lot line (north) and a 25' setback is required. Note: the petitioner is requesting a setback variance from the Board of Appeals on October 26, 2020.
4. Update the site statistics and data on the first page. For example, two different sizes are provided for the existing building and building area.
5. The Landscaping Plan shows 13 trees and 3 shrubs on the front of the property that need to be placed prior to requesting occupancy permits.

Inspection: None.

REVIEW PROCESS

For Site Plan Requests, the Plan Commission either approves or denies the project. Conditions of approval must be resolved between the petitioner and staff before a final approval memo is issued and building permits are released. This site plan is not reviewed by the Common Council.

STAFF RECOMMENDATION:

Staff recommends APPROVAL of the site plan request for a new 15,005 SF industrial building addition at 1881 Commerce DR, subject to compliance with the conditions listed in the 'Staff Comments' section of this report.

The Plan Commission recommendation should include a reference to approval (or non-approval) of the use of metal on the addition, as referenced in the report and shown on the site plan.

Note: If the Board of Appeals denied or tabled a variance request for an interior side yard setback, then the Plan Commission cannot approve the site plan. The site plan should be either tabled for revisions or denied.

CITY OF DE PERE RECEIVED SEP 21 2020 PLANNING DEPT.

DE PERE RUNS DEEPER

CITY OF DE PERE

APPLICATION FOR SITE PLAN REVIEW

Fee: $ 305.00
Receipt #: 155561
Date: 9-21-20

Read all instructions provided before completing. If additional space is needed, attach additional pages. Type or use black ink.

SECTION 1: Applicant / Permittee Information

Applicant Name (Ind., Org. or Entity)	Authorized Representative	Title	
HEYRMAN CONST. CO., INC	CHRIS J. HEYRMAN	ARCHITECT	
Mailing Address	**City**	**State**	**ZIP Code**
P.O. Box 28046	GREEN BAY	WI	54324
Email Address	**Phone Number (incl. area code)**	**Fax Number (incl. area code)**	
CHRIS@HEYRMANCONST.COM	920-347-0827	920-337-6337	

SECTION 2: Landowner Information (complete these fields when project site owner is different than applicant)

Name (Ind. Org. or Entity)	Contact Person	Title	
KAY BEER DISTRIBUTING, INC	CHIP KOLOCHESKI	PRESIDENT	
Mailing Address	**City**	**State**	**ZIP Code**
1881 COMMERCE DRIVE	DE PERE,	WI	54115
Email Address	**Phone Number (incl. area code)**	**Fax Number (incl. area code)**	
CHIPK@KAYDIST.COM	920-336-2267	920-336-9139	

SECTION 3: Project or Site Location

Project Address/Description	Parcel No.
1881 COMMERCE DRIVE	

SECTION 4: Project Information

Existing Zoning:	I-1		
Present Use of Parcel:	BUSINESS / WAREHOUSE		
Proposed Use of Parcel:	SAME		
Estimated Start Date:	NOV. 2020	Estimated Completion Date:	JUNE 2021

Please submit 1 hard copy 24x36, 1 hard copy 11x17 and 1 PDF copy of the submittal.

SECTION 5: Certification and Permission

Certification: I hereby certify that I am the owner or authorized representative of the owner of the property which is the subject of this Permit Application. I certify that the information contained in this form and attachments is true and accurate. I certify that the project will be in compliance with all permit conditions. I understand that failure to comply with any or all of the provisions of the permit may result in permit revocation and a fine and/or forfeiture under the provisions of applicable laws.

Permission: I hereby give the City permission to enter and inspect the property at reasonable times, to evaluate this notice and application, and to determine compliance with any resulting permit coverage.

Name of Owner/Authorized Representative (please print)	Title	Phone Number
CHRIS J. HEYRMAN	ARCHITECT	920-347-0827
Signature of Applicant		**Date Signed**
		9-21-20

TO BE COMPLETED BY CITY STAFF

CSM Review authorized by the De Pere Municipal Code, Chapter 46.	

KAY DISTRIBUTING CO.

DE PERE, WISCONSIN

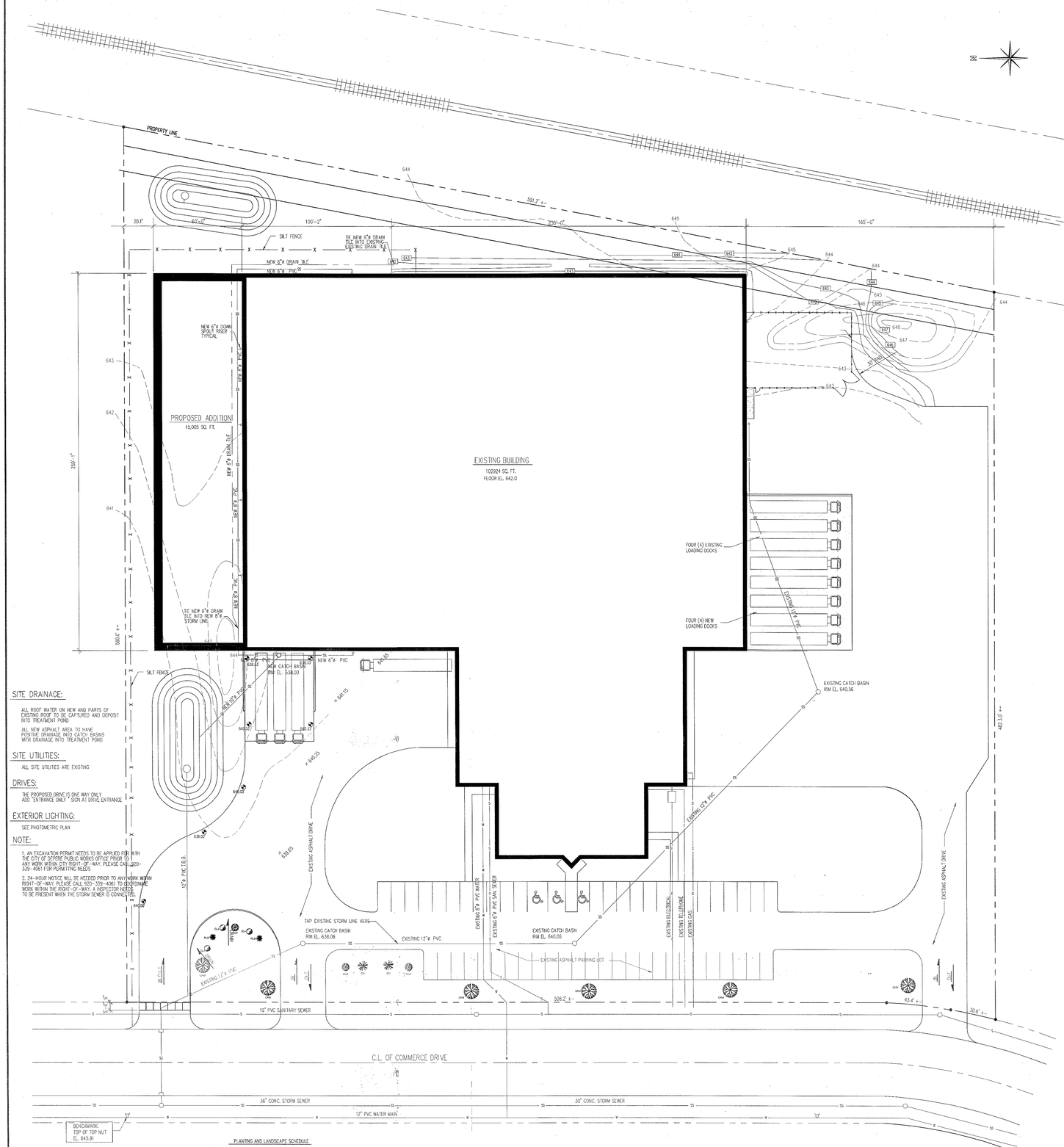

SITE PLAN, LANDSCAPE PLAN, EROSION CONTROL PLAN

SCALE 1" = 30'-0"

SITE DRAINAGE:

ALL ROOF WATER ON NEW AND PARTS OF EXISTING ROOF TO BE CAPTURED AND DEPOSIT INTO TREATMENT POND

ALL NEW ASPHALT AREA TO HAVE POSITIVE DRAINAGE INTO CATCH BASINS WITH DRAINAGE INTO TREATMENT POND

SITE UTILITIES:

ALL SITE UTILITIES ARE EXISTING

DRIVES:

THE PROPOSED DRIVE IS ONE WAY ONLY
ADD "ENTRANCE ONLY " SIGN AT DRIVE ENTRANCE

EXTERIOR LIGHTING:

SEE PHOTOMETRIC PLAN

NOTE:

1. AN EXCAVATION PERMIT NEEDS TO BE APPLIED FOR WITH THE CITY OF DEPERE PUBLIC WORKS OFFICE PRIOR TO ANY WORK WITHIN CITY RIGHT-OF-WAY. PLEASE CALL 920-339-4061 FOR PERMITTING NEEDS

2. 24-HOUR NOTICE WILL BE NEEDED PRIOR TO ANY WORK WITHIN RIGHT-OF-WAY. PLEASE CALL 920-339-4061 TO COORDINATE WORK WITHIN THE RIGHT-OF-WAY. A INSPECTOR NEEDS TO BE PRESENT WHEN THE STORM SEWER IS CONNECTED.

LANDSCAPING NOTES:

ALL PLANT MATERIAL SHALL CONFORM TO "AMERICAN STANDARDS FOR NURSERY STOCK" LATEST EDITION.

PLANTING SCHEDULE TO BE WITHIN A PERIOD NOT TO EXCEED TWO (2) YEARS FROM THE DATE OF COMMENCEMENT OF CONSTRUCTION

ALL LANDSCAPING TO CONFORM TO CITY OF DE PERE CODE OF ORDINANCES / CHAPTER 14 / ARTICAL XII / 14-60 / (10) LANDSCAPING.

PLANTING AND LANDSCAPE SCHEDULE

KEY	SYMBOL	BOTANICAL NAME	COMMON NAME	QUANTITY	SIZE AT PLANTING
PKP		PRUNUS	PRINCESS KAY PLUM	3	2"-4" WIDE
OKM		ACER PLATANOIDES	OKMSON KING MAPLE	6	2" CALIPER
CH		CHEYENNOSIS CRUD-GALI	CRUDDER THOMPLESS DOORSPUR HAWTHORN	2	3"-4" WIDE
RLB		BERBERIS THUNBERGII	RED LEAF BARBERRY	2	2"-4" WIDE
GLA		AZALEA	GOLDEN LIGHT AZALEA	3	1"-2" WIDE

EROSION CONTROL NOTES:

ALL CONTRACTORS INSTALLING PIPELINE SHOULD OBTAIN THE WISCONSIN CONSTRUCTION SITE BEST MANAGEMENT PRACTICE HANDBOOK.

ALL EROSION AND SEDIMENT CONTROL MEASURES SHOULD BE CONSTRUCTED AND MAINTAINED IN ACCORDANCE WITH THE WISCONSIN CONSTRUCTION SITE BEST MANAGEMENT PRACTICE HANDBOOK.

ALL SEDIMENT CONTROL MEASURES SHOULD BE ADJUSTED TO MEET FIELD CONDITIONS AT THE TIME OF CONSTRUCTION AND INSTALLED PRIOR TO ANY GRADING OR DISTURBANCE OF EXISTING SURFACE MATERIAL

PERIODIC INSPECTION AND MAINTENANCE OF ALL SEDIMENT CONTROL STRUCTURES SHOULD BE PROVIDED TO ENSURE INTENDED PURPOSE IS ACCOMPLISHED. SEDIMENT CONTROL MEASURES ARE TO BE IN WORKING CONDITION AT THE END OF EACH WORKING DAY.

AFTER ANY SIGNIFICANT RAINFALL, SEDIMENT CONTROL STRUCTURES SHOULD BE INSPECTED FOR INTEGRITY. ANY DAMAGED STRUCTURES SHOULD BE CORRECTED FOR INTEGRITY.

SEDIMENT CONTROL MEASURES SHOULD NOT BE REMOVED UNTIL THE AREAS SERVED, HAVE ESTABLISHED VEGETATIVE COVER.

GRAVEL MATS SHOULD BE INSTALLED AT ALL CONSTRUCTIONS SITE EXITS TO PREVENT TRACKING OF SOIL.

TRACKED SOIL SHOULD BE COLLECTED FROM PAVED ROADS LOCATED NEAR THE CONSTRUCTION SITE.

ALL TRENCH WATER SHOULD BE DISCHARGED INTO A SETTING BASIN OR FILTERING DEVICE PRIOR TO RELEASE INTO STORM SEWER OR STREAM.

STORM SEWER COLLECTION BASINS SHOULD BE PROTECTED FROM RUNOFF BY ENCLOSING COLLECTION BASINS WITH STRAW BALES OR FILTER FABRIC FENCING. SEE DETAILS.

OVERLAND FLOW SHOULD BE PREVENTED FROM LEAVING THE WORK SITE BY INSTALLING STRAW BALE OR FILTER FABRIC FENCING PARALLEL TO THE CONTOURS LOCATED DOWNHILL FROM THE WORK AREA.

SEDIMENT CONTROL FOR PIPELINE CONSTRUCTION:
A. EXCAVATED TRENCH MATERIAL SHALL BE PLACED ON THE UPHILL SIDE OF THE TRENCH.
B. IMMEDIATELY FOLLOWING PIPE INSTALLATION, THE TRENCH SHOULD BE BACKFILLED, COMPACTED AND STABILIZED AT THE END OF EACH WORKING DAY.

FOLLOWING INITIAL SOIL DISTURBANCE, PERMANENT OR TEMPORARY STABILIZATION SHALL BE COMPLETED WITHIN SEVEN CALENDAR DAYS AS TO THE SURFACE OF ALL PERIMETER CONTROLS, DIKES, SWALES, DITCHES, PERIMETER SLOPES, AND ALL SLOPES GREATER THAN 3:1. IN ADDITION, ALL OTHER DISTURBED OR GRADED AREAS WILL BE STABILIZED WITHIN FOURTEEN CALENDAR DAYS.

EXCESS SOIL NOT USED FOR BACKFILLING OR FINAL GRADING TO BE REMOVED FROM SITE DURING EXCAVATION.

FOUNDATION TO BE BACKFILLED WITHIN 10 DAYS AFTER COMPLETION OF FOUNDATION.

BUILDING OCCUPANCY:

STORAGE S-2
BUSINESS B

BUILDING CLASSIFICATION:

METAL BUILDING TYPE II-B

GENERAL BUILDING HEIGHT & AREA:

ALLOW. HEIGHT & AREA FOR II-B FROM TABLE 503
BUSINESS B 55' 23,000 SQ. FT.
WAREHOUSE S-2 55' 26,000 SQ. FT.

ALLOW. HEIGHT & AREA FOR II-B W/ MODIFICATIONS
BUSINESS B 75' 123,050 SQ. FT.
ACTURAL MEAN BUILDING HEIGHT = 29.6 FT.
ACTURAL BUILDING AREA = 117,929 SQ. FT.

SPRINKLER SYSTEM:

COMPLETE NFPA 13 SPRINKLER SYSTEM PROVIDED

OCCUPANT LOAD:

CALCULATED OCCUPANT LOAD = 280 PERSONS

EGRESS:

CALCULATED OCCUPANT LOAD = 280 PERSONS
CALCULATED EGRESS WIDTH = 56 INCHES
EGRESS WIDTH PROVIDED = 396 INCHES

OWNER & BUILDING LOCATION:

KAY DISTRIBUTING CO.
1861 COMMERCE DRIVE
DE PERE, WISCONSIN

LOADS:

GROUND SNOW (Pg) = 40 P.S.F.
SNOW LOAD IMPORTANCE FACTOR Is = 1
SNOW LOAD EXPOSURE FACTOR Ce = 1
SLOPED ROOF/FLAT ROOF FACTOR Ps = 1
ROOF THERMAL FACTOR Ct = 1.0
ROOF SNOW = 28 P.S.F.
ROOF DEAD LOAD = AS PER NUCOR BUILDING SYSTEMS
ROOF COLLATERAL LOAD = 5 P.S.F.
GROUND FLOOR LIVE LOAD = 100 P.S.F.

BASIC WIND SPEED = 90 MPH
WIND IMPORTANCE FACTOR I = 1
WIND EXPOSURE FOR ALL SIDES = B
SOIL BEARING: 3000 PSF

WIND LOAD RESISTING SYSTEM:

PER NUCOR BUILDING SYSTEM

SEISMIC DESIGN:

SEISMIC USE CATEGORY I
SEISMIC SITE CLASS D
SEIMIC DESIGN CATEGORY A
Ss = .065 S1 = .032

ACTUAL NUMBER OF EMPLOYEES :

25 EMPLOYEES IN BUILDING

PLUMBING REQUIREMENTS:

NO PLUMBING PROVIDED IN THIS ADDITION

EXISTING FIXTURES FOR MEN- 2 WATER CLOSETS AND 1 URINAL

EXISTING FIXTURES FOR WOMEN- 2 WATER CLOSETS

BUILDING AREA:

EXISTING BUILDING = 102,924 SQ. FT.
NEW ADDITION = 16,100 SQ. FT.
TOTAL BUILDING AREA = 119,024 SQ. FT.

KEY TO SITE PLAN

PROPERTY LINE
CENTER LINE
FUTURE ADDITIONS
SETBACK LINES
SILT FENCES
SANITARY SEWER
STORM SEWER
WATER MAIN
GAS LINE
TELEPHONE LINE
ELECTRICAL LINES
92.68 EXISTING GRADE
98.33 NEW GRADE
NEW GRADE SLOPE
EXISTING GRADE SLOPE

BENCHMARK :

TOP OF EXISTING FLOOR SLAB EL. 642'-0"

PARKING REQUIREMENTS:

OFFICE: 4 SPACES PER 1000 S.F. OF FLOOR AREA
WAREHOUSE : 1 SPACE PER EACH EMPLOYEE + VISITOR PARKING

EXISTING OFFICE: 7531/1000 =7.53 X 4 = 30 STALL REQUIRED
WAREHOUSE: 10 EMPLOYEES MAX = 10 STALLS REQUIRED

TOTAL PARKING STALLS REQUIRED= 40
TOTAL PARKING STALLS PROVIDED = 55

SITE STATISTICS:

LOT AREA = 305,384.4 SQ. FT.
BUILDING AREA = 102,882 SQ FT.
PAVED AREA = 102,110 SQ. FT.
GREEN AREA = 100,392.4 SQ. FT.
PERCENT OF GREEN SPACE = 33%
DISTURBED AREA = 40016 SQ. FT.

SHEET INDEX

A-1	SITE PLAN AND TITLE SHEET
A-2	MASTER FLOOR PLAN, EGRESS PLAN AND SPECIFICATIONS
A-3	FOOTING AND FOUNDATION PLAN
A-4	CONCRETE DETAILS
A-5	FLOOR PLAN AND BUILDING CROSS SECTION
A-6	BUILDING ELEVATIONS

DETAIL IDENTIFICATION

DIRECTION DETAIL IS CUT — 1/3 — DETAIL NUMBER — SHEET DETAIL IS LOCATED ON

SYMBOLS

CONCRETE
GRANULAR FILL
EARTH
RIGID INSULATION
FIBERGLASS INSULATION
CONCRETE BLOCK
FACE BRICK
STONE
FRAMING LUMBER
FINISH WOOD

STRUCTURAL APPROVAL

AREA:
15,005 SQ. FT.

Heyrman
CONSTRUCTION COMPANY INC.
ENGINEERS - BUILDERS
1030 WAUBE LANE, P.O. BOX 28046, GREEN BAY, WISCONSIN 54324
TEL: 920/499-0827 FAX: 920/337-6337

DRAWN: G.J.H. CHECKED: APPROVED:
SCALE: NOTED DATE: 7-1-20

REVISIONS	DATE
REVISIONS	DATE

SITE PLAN AND TITLE SHEET

KAY DISTRIBUTING CO.
DE PERE, WISCONSIN

JOB NO. ????

SHEET NO. A-1

DRAWING NO. P-3171-4

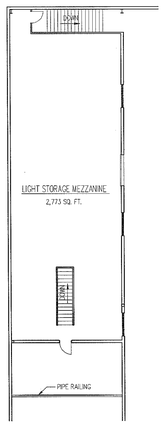

EXISTING MEZZANINE PLAN SCALE 1/16" = 1'-0"

SPECIFICATIONS

STRUCTURE:

NUCOR BUILDING SYSTEMS 100'-2" WIDE X 250'-1" LONG X 28'-0" HIGH BUILDING

THIS IS A NUCOR BUILDING SYSTEMS PRE-ENGINEERED METAL BUILDING AND AT ALL SPLICE CONNECTIONS ALL OF THE HOLES IN THE CONNECTIONS WILL BE FILLED WITH THE APPROPRIATE A-325 H.S. BOLTS SUPPLIED BY NUCOR BUILDING SYSTEMS, TIGHTENED TO THE REQUIRED TORQUE BY THE TURN OF THE NUT METHOD.

OCCUPANCY:

STORAGE S-2
BUSINESS B

FILL COMPACTION:

ALL FILL MATERIAL TO BE WELL GRADED GRANULAR MATERIAL. FOOTINGS TO BEAR ON UNDISTRUBED SOIL. FLOOR TO REST ON MECHANICALLY COMPACTED SAND FILL. ALL COMPACTED MATERIAL SHALL MEET 95% MODIFIED PROCTOR TEST.

CONCRETE:

POURED CONCRETE SHALL MEET THE REQUIREMENTS OF THE LATEST EDITION OF THE GUIDE SPECIFICATIONS FOR READY MIXED CONCRETE. THE CONCRETE SHALL ATTAIN A MINIMUM COMPRESSIVE STRENGTH OF 3000 P.S.I. AT 28 DAYS. SLUMP SHALL NOT EXCEED 4 INCHES. CONCRETE FOOTINGS AND WALLS TO BE 5 BAG MIX MINIMUM. THE FLOOR SYSTEM SHALL BE 5 BAG MIX.

REINFORCING SHALL COMPLY WITH A.S.T.M. A-185 FOR DEFORMED BILLET STEEL BARS WITH A 60,000 P.S.I. MINIMUM YIELD POINT.

WELDED WIRE FABRIC SHALL BE IN ACCORDANCE WITH THE STANDARD SPECIFICATIONS FOR COLD DRAWN STEEL WIRE CONCRETE REINFORCEMENT A.S.T.M. A-32 AND A.S.T.M. A-185.

CONCRETE BLOCK:

BLOCK PARTITION WALLS SHALL BE LIGHT WEIGHT CONCRETE UNITS MEETING STRENGTH AND ABSORPTION REQUIREMENTS OF THE A.S.T.M.

CONCRETE BLOCK USED IN THE INTERIOR FIRE WALLS SHALL BE WAY-LITE CONCRETE UNITS 4 HOUR RATED AS MANUFACTURED BY COUNTY CONCRETE CORP., GREEN BAY, WISCONSIN AND MEETING THE REQUIREMENTS OF THE DEPARTMENT OF INDUSTRY, LABOR AND HUMAN RELATIONS.

THE EXTERIOR ARCHITECTURAL CONCRETE BLOCK UNITS SHALL BE EQUAL TO 12" THICK STANDARD WEIGHT BLOCK AS MANUFACTURED BY COUNTY CONCRETE CORP., GREEN BAY, WISCONSIN OR BEND INDUSTRIES, INC., APPLETON, WISCONSIN. THE BLOCK SHALL HAVE A SPLIT FACE AND IN COLOR CALLED FOR ON THE PLANS. MORTAR COLOR SHALL MATCH ARCHITECTURAL UNITS.

ALL EXTERIOR CONCRETE BLOCK WALLS SHALL BE INSULATED W/ E.P.S. FOAM BEAD INSULATION. ALL EXTERIOR CONCRETE BLOCK FIREWALLS SHALL BE INSULATED W/ VERMICULITE INSULATION.

BOND BEAMS WIL CONSIST OF TWO (2) #40 BARS CONTINUOUS. STEEL BARS TO BE SUPPLIED BY HEYRMAN CONSTRUCTION CO. INC. SEE PLANS FOR LOCATION OF BOND BEAMS

SEE PLANS FOR LOCATIONS OF EXPANSION JOINTS.

DUR-O-WALL SHALL BE 3/16 DIAMETER AS REQUIRED BY THE DEPARTMENT OF INDUSTRY, LABOR AND HUMAN RELATIONS. LAP ALL REINFORCEMENT 6 INCHES. DUR-O-WALL SHALL BE LOCATED AT EVERY OTHER COURSE.

CONCRETE BLOCK UESED FOR THE VENEER SHALL BE 4" THICK STANDARD WEIGHT UNITS MEETING STRENGTH AND ABSORPTION RQUIREMENTS OF THE A.S.T.M. THE VENEER SHALL BE FULL FACE SPLIT ARCHITECTURAL UNITS, AS MANUFACTURED BY COUNTY CONCRETE CORP. GREEN BAY, WISCONSIN

ALL MASONRY WORK SHALL BE PERFORMED BY SKILLED WORKMEN IN A COMPETENT MANNER. JOINTS SHALL BE CLEAN, STRAIGHT, PLUMB, LEVEL AND UNIFORM, CHIPPED, BROKEN AND CRACKED UNITS SHALL NOT BE USED.

STRUCTURAL STEEL:

ALL STRUCTURAL STEEL REQUIRED ADDITIONAL TO THAT FURNISHED WITH THE NUCOR BUILDING SYSTEMS STEEL BUILDING SHALL BE A-36. DESIGNS SHALL CONFORM TO THE LATEST A.I.S.C. SPECIFICATIONS. A SHOP COAT OF PRIMING PAINT SHALL BE APPLIED AFTER FABRICATION.

STRUCTURAL WOOD:

ALL STRUCTURAL WOOD REQUIRED SHALL BE EQUAL TO HEM-FIR NUMBER 2 GRADE OR BETTER BASED ON THE STANDARDS ESTABLISHED BY THE WESTERN WOOD PRODUCTS ASSOCIATION.

HEATING:

HEATING SHALL BE DONE IN ACCORDANCE WITH ALL STATE AND LOCAL CODES. HEATING SYSTEM SHALL BE SUBMITTED BY A MECHANICAL ENGINEER FOR APPROVAL.

SANITATION:

SANITATION SHALL BE DONE IN ACCORDANCE WITH ALL STATE AND LOCAL CODES. PLUMBING SYSTEM SHALL BE SUBMITTED BY A LICENSED PLUMBING FOR APPROVAL.

ELECTRICAL:

ELECTRICAL WORK SHALL BE DONE BY A LICENSED ELECTRICIAN IN ACCORDANCE WITH ALL STATE AND LOCAL CODES. ELECTRICAL DESIGNER OR ENGINEER TO SUBMIT A LIGHTING PLAN TO THE DEPT. OF INDUSTRY, LABOR AND HUMAN RELATIONS FOR APPROVAL.

ALL WORK TO BE DONE IN A WORKMANLIKE MANNER.

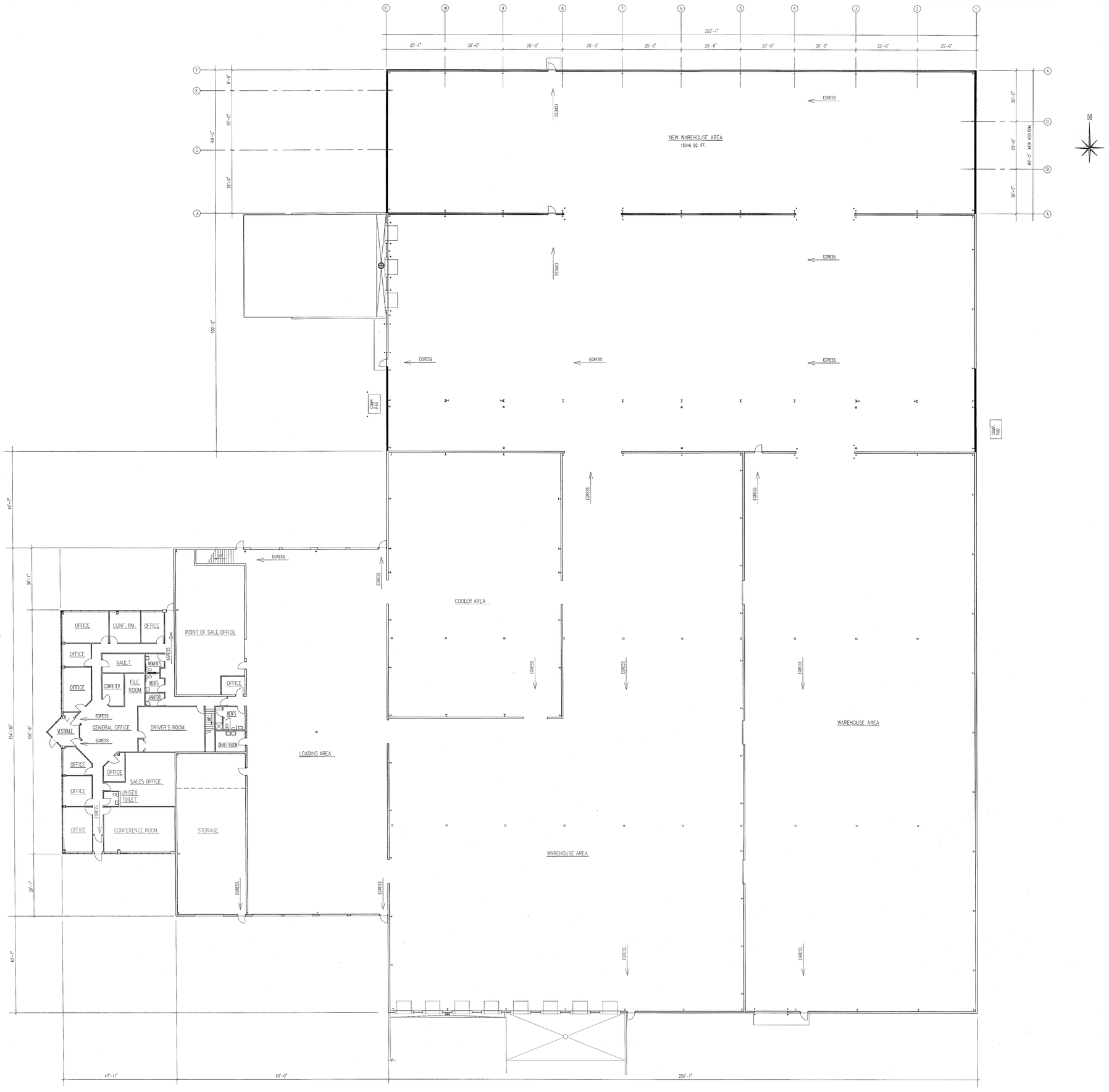

MASTER FLOOR PLAN, EGRESS PLAN SCALE 1/16" = 1'-0"

EXISTING BUILDING = 102,924 SQ. FT.

Heyrman
CONSTRUCTION COMPANY INC
ENGINEERS - BUILDERS
1030 WALBE LANE, P.O. BOX 28046, GREEN BAY, WISCONSIN 54324
TEL: 920/499-0827 FAX: 920/337-6337

SCALE:	NOTED
DATE:	9-12-20
DRAWN:	C.J.H.
CHECKED:	
APPROVED:	

REVISIONS	DATE

REVISIONS	DATE

MASTER FLOOR PLAN AND SPECIFICATIONS

KAY DISTRIBUTING CO.
DE PERE, WISCONSIN

JOB NO. ????

SHEET NO. A-2

DRAWING NO. P-317

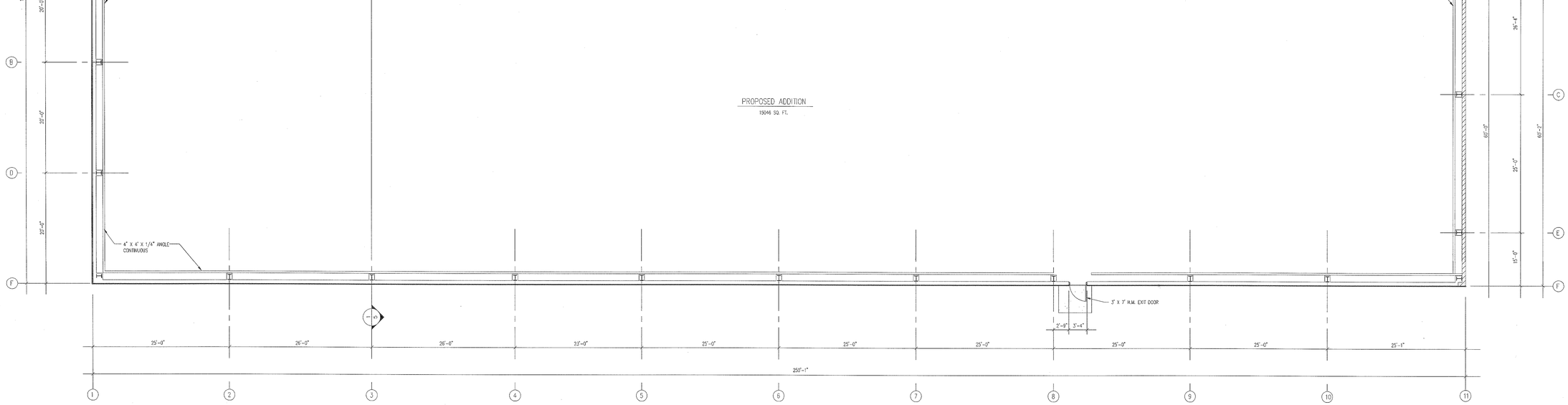

FLOOR PLAN SCALE 1/8" = 1'-0"

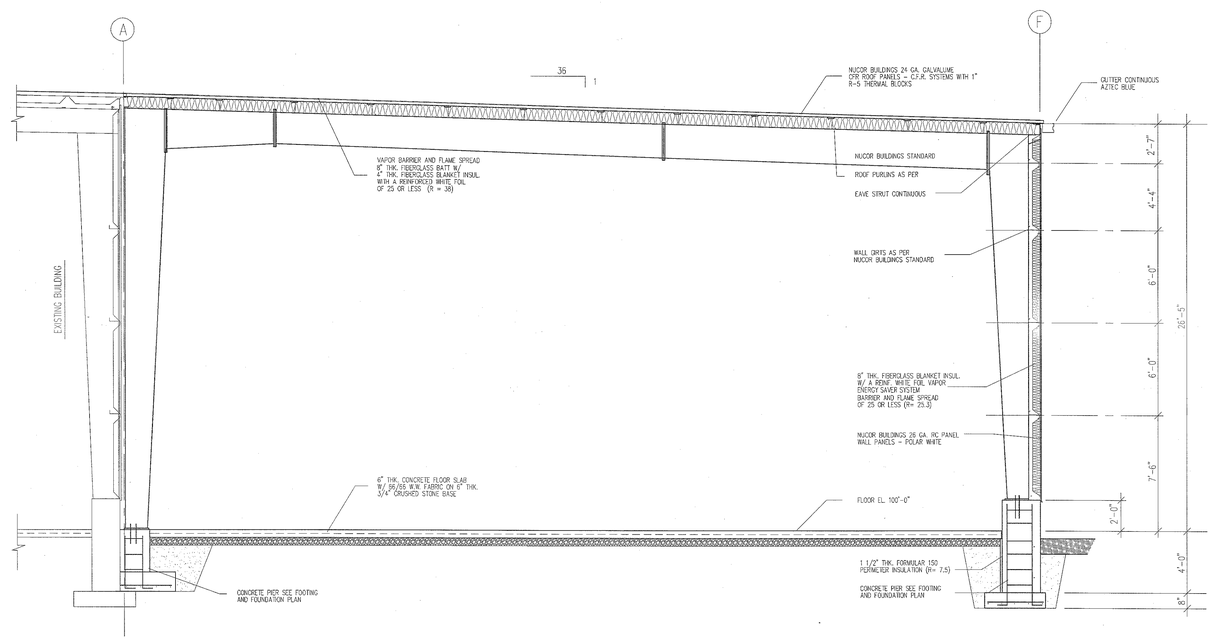

BUILDING CROSS SECTION 1/5 SCALE 1/4" = 1'-0"

Heyrman
CONSTRUCTION COMPANY, INC.
ENGINEERS BUILDERS
1030 WEST
TEL: 92

3.c

DATE: 9-17-20

SCALE: NOTED

DATE | REVISIONS | DATE | REVISIONS

FLOOR PLAN

KAY DISTRIBUTING CO.
DE PERE, WISCONSIN

JOB NO. ????

SHEET NO. A-5

DRAWING NO. P-3317

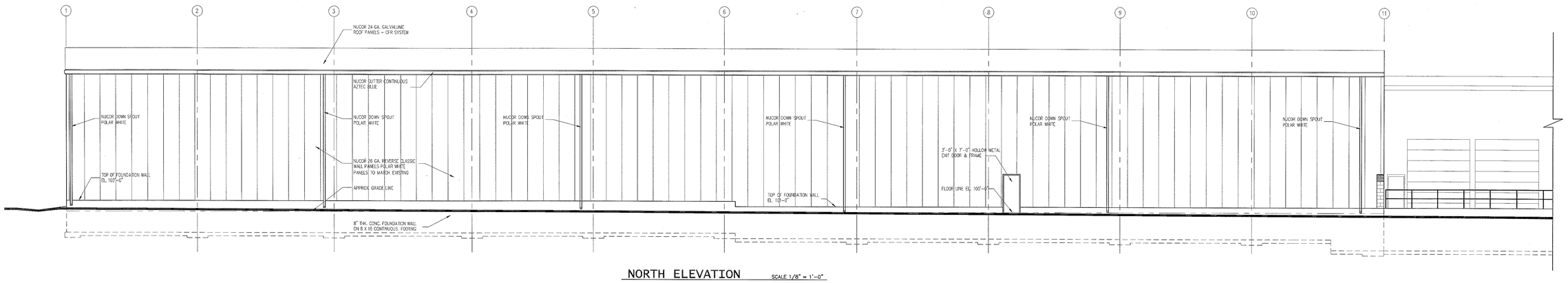

NORTH ELEVATION SCALE 1/8" = 1'-0"

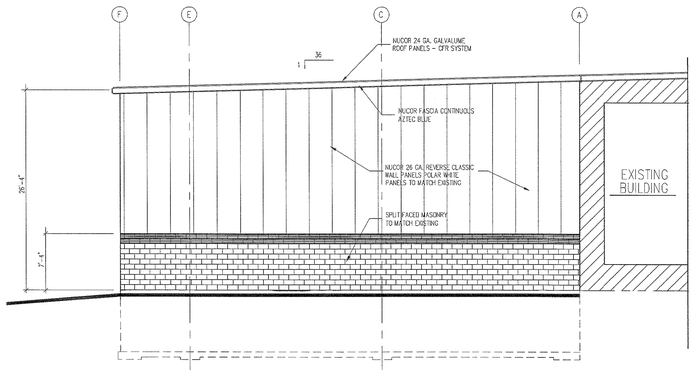

WEST ELEVATION SCALE 1/8" = 1'-0"

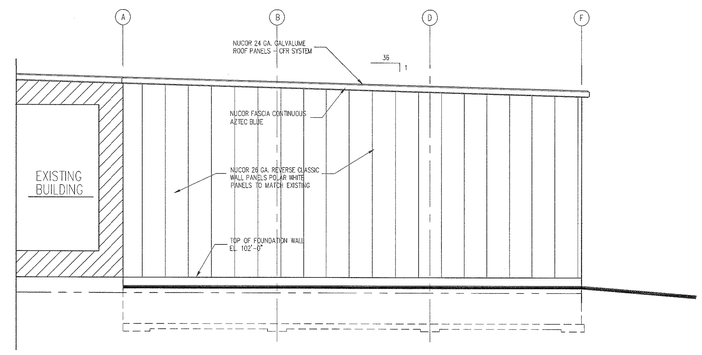

EAST ELEVATION SCALE 1/8" = 1'-0"

Heyrman
CONSTRUCTION COMPANY INC.
ENGINEERS - BUILDERS
1030 WAUBE LANE, P.O. BOX 28046, GREEN BAY, WISCONSIN 54324
TEL: 920/499-0827 FAX: 920/337-6337

APPROVED:	
CHECKED:	
DRAWN: C.J.H.	
DATE: 9-14-20	
SCALE: NOTED	

REVISIONS	DATE

REVISIONS	DATE

BUILDING ELEVATIONS

KAY DISTRIBUTING CO.
DE PERE, WISCONSIN

JOB NO. ????

SHEET NO. A-6

DRAWING NO. P-2317

City of De Pere, Wisconsin

Request For Plan Commission Action

MEETING DATE:	**October 26, 2020**
DEPARTMENT:	**Planning**
FROM:	**Peter Schleinz**
SUBJECT:	**Consideration and possible action regarding a Precise Implementation Plan (PIP) for a proposed new restroom and dump station on the Brown County Fairgrounds at 1500 Fort Howard AV (Parcels WD-57, WD-67, WD-70-1).***

ATTACHMENTS:

- PC Report - PIP for Brown County Fairgrounds (DOCX)
- Application Form (PDF)
- Ordinance with Conditions from PDD for PIP - 19 Sep 2020 (PDF)
- Site Plan (PIP) - REVISED 3 PRELIMINARY - 21 Oct 2020 (PDF)

ITEM 4: **Consideration and possible action regarding a Precise Implementation Plan (PIP) for a proposed new restroom and dump station on the Brown County Fairgrounds at 1500 Fort Howard AV (Parcels WD-57, WD-67, WD-70-1).***

SITE MAP

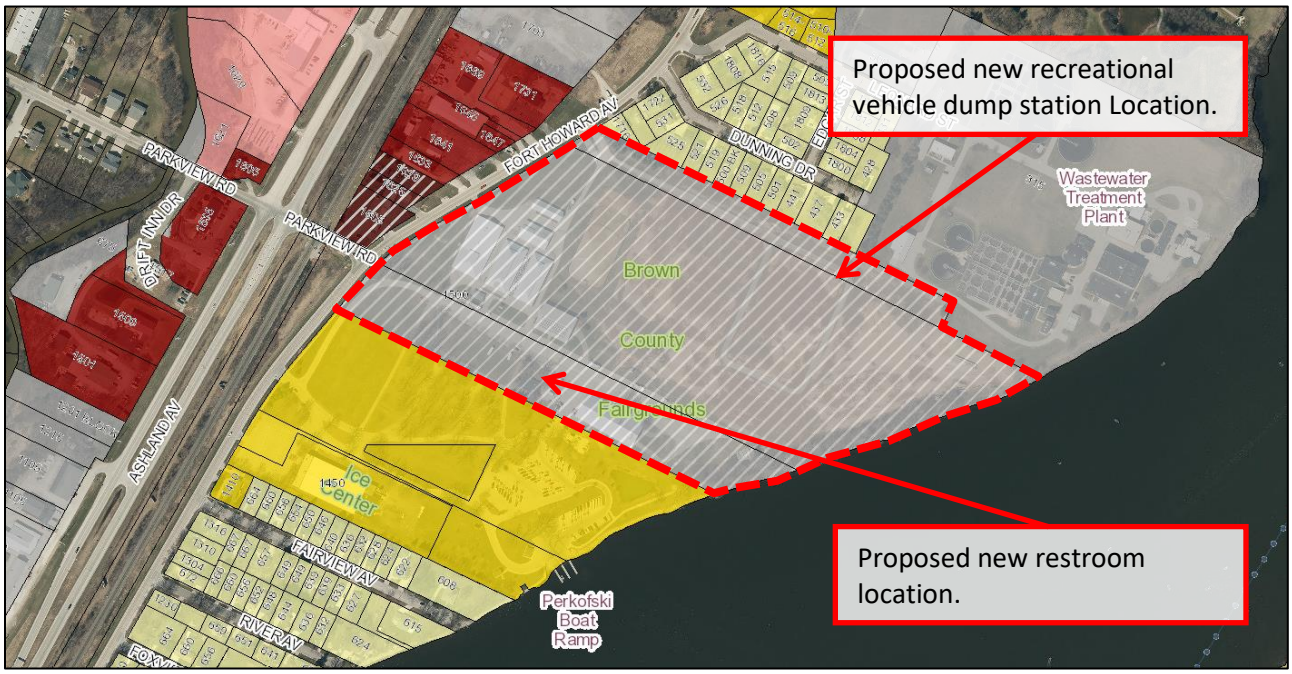

REQUESTED ACTION: Precise Implementation Plan (PIP)

Required follow up to rezoning and General Development Plan approval from September 15, 2020.

COMMON DESCRIPTION: 1500 Fort Howard DR, located east from the Fort Howard DR and Parkview RD intersection. Also along the West side of the Fox River.

PARCEL NUMBER(S): WD-57, WD-67, WD-70-1

EXISTING ZONING: I-3 PDD (General Industrial District with a Planned Development District overlay).

SURROUNDING LAND USES: Single-family residential (R-1) and wastewater treatment plant (I-3) to the north.
City-owned portion of fairgrounds (R-2) to the south.
Fox River to the east.
Businesses (B-2 & B-3) and Ashland AV to the west.

COMPREHENSIVE PLAN: Parks and Recreation.

APPLICANT / OWNER:

Matt Kriese, Brown County Parks Director	Brown County Park Fairgrounds
Authorized representative	Property owner
PO BOX 236000	PO BOX 236000
Green Bay, WI 54305-3600	Green Bay, WI 54305

SITE HISTORY: The Brown County Fairgrounds have been located at the subject location for over 100 years. The site encompasses 36 acres of Brown County-owned land with seven main buildings, a hard surface midway area, and a ¼ mile of Fox River frontage. The site is used for community celebrations, agricultural shows, the annual Brown County Fair, and other holiday events during the warmer months. During the winter, the large buildings are used for unheated storage. *(Above 'Site History' source: Brown County Fairgrounds Master Plan – March 2019).*

In 2005 a rezoning PDD, General Development Plan, and PIP approved for the site. The proposed site plans for additions in 2020 did not match the 2005 documents. The petitioner worked with staff to prepare to submit an updated Rezoning-PDD with General Development Plan and a Precise Implementation.

On July 27, 2020, Brown County presented pre-application plans to Plan Commission to remove and rebuild a new larger restroom near the same location, as well as removing an existing recreational vehicle (RV) dump station (near the restroom) and rebuilding a new larger RV dump station near the northern border of the fairground properties.

On August 10, 2020, Brown County submitted a rezoning-PDD request and General Development Plan to update a year 2005 PDD/PIP for the fairground that became outdated. At the same time, Brown County is updating its Fairground Master Plan to reflect the two new additions being in the proposed locations. The submittal was approved, with conditions, by Plan Commission on August 24, 2020 and, following a public hearing, by Common Council on September 15, 2020.

On September 21, 2020 the petitioner requested a PIP review with revised plans submitted for consideration on September 21, 2020, October 2, 2020, October 19, 2020 and October 21, 2020. The plan submittals were similar to the General Development Plan that was reviewed by Plan Commission in August.

STAFF REVIEW: This submittal is the required final zoning review for the Planned Development District overlay for this property. The PIP functions as a site plan for Planned Development properties. Municipal Code Chapter 14, Article XI provides specific regulations for Planned Development Districts but other sections of the Zoning Code are also utilized when reviewing this application.

PIP REVIEW CONSIDERATIONS

SUMMARY

The applicant requests that a restroom and shower facility on the property be removed and replaced with a new, larger restroom and shower facility in the same area to accommodate the fairgrounds and the campsites on the property. The request also includes removing a recreational vehicle (RV) dump station near the restroom and building a new three lane RV dump station at the north end of the property to accommodate campsites and on property users; the dump station is not a regional facility. And finally, the overall site plan page identifies the locations of other existing and proposed uses on the site in the PIP, including:

- The proposed restroom and shower facility.
- The proposed three lane RV dump station.
- The existing 58 campsite locations.
- The horse corral and announcer platform.
- The five barns (sheep and poultry, cattle, judging, and two for horses).
- The north building and south building.
- The midway.
- The parking areas and drive lanes.

Proposed Project Review Schedule
The project review is anticipated to be completed on November 2, 2020; See the 'Review Process' section near the end of this report for a complete start-to-finish project review schedule. The project construction will be completed by 2021, likely by May 2021.

Proposed PIP Site Plan
Many review criteria relevant to the PIP were reviewed as part of the Rezoning and General Plan Process. However, the PIP is far more detailed and is similar to a site plan for Plan Commission review.

Rezoning and General Development Plan
The Common Council approved the Rezoning and General Plan on September 15, 2020 with Ordinance #20-13, subject to the following conditions:

1. The use of an RV dump station is approved as a permitted use, with the following allowances:
    a. Reducing transitional yard for RV dump station from 50' to 15';
    b. Allowing a dustproof gravel base for drive lanes;
    c. Potential combining of parcels as certain permits may not be obtainable if final Precise Implementation Plan site location straddles a property line.
2. The restroom is a permitted use, with the following allowances:
    a. Eliminating transitional yard requirement for restroom;
    b. Reducing side yard setback from 25' to 14' for restroom building;
    c. Permitting the use of metal materials on all four facades of the restroom building.
3. All 58 existing campsite locations must be identified on the Precise Implementation Plan submittal for this project.
4. Brown County Fairground Master Plan must be updated to reflect new structure locations.
5. The driveway surfaces shall be paved as improvements are made.
6. Final Master Plan approvals should also be submitted to the City for approval/acceptance.
7. Any use that ceases for a period of 12 months requires a new General Development Plan and Precise Implementation Plan approval.
8. Compliance with all state and local laws and regulations, including compliance with all the provisions of Chapter 14, De Pere Municipal Code.

The PIP has been updated to reflect most of the Council approved conditions. Any remaining and new conditions have been included in the staff comment/condition section of this report.

1. Code Use and Bulk Requirements

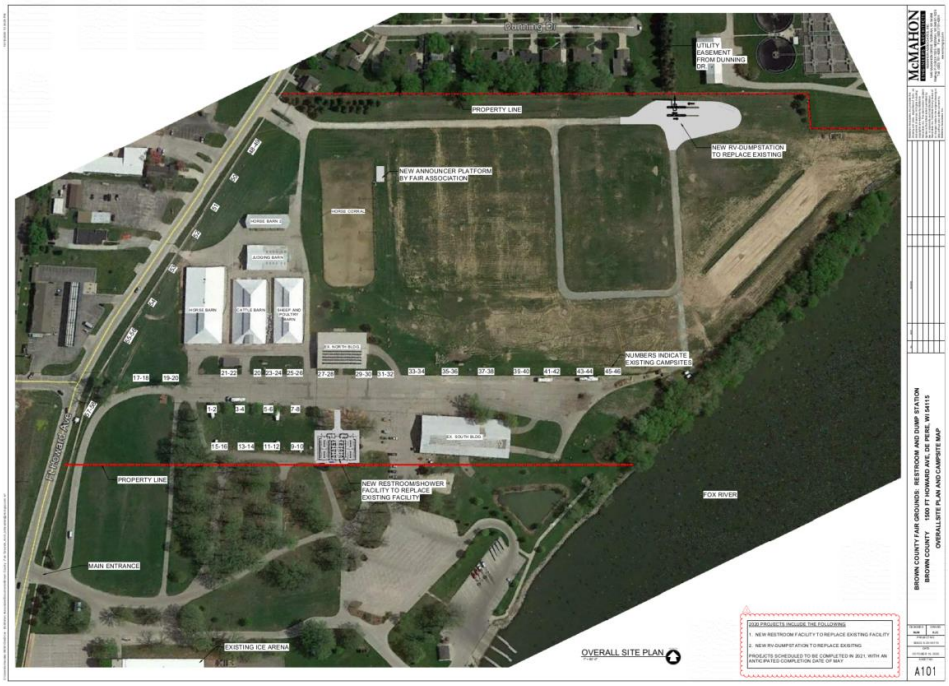

The site plan complies with the following massing and setback requirements set by the I-3- District (Code Section 14-49):

- Land Use: Fairgrounds (uses permitted via PDD overlay).
- Lot Size: 3.2ac + 25.7ac + 7.0ac = 33.9 acres (no minimum required).
- Front Yard Setback – west: ~650' (25' required).
- Interior Side Yard Setback – north & south: 15' & 18' (See note).
    - *Note: Ordinance #20-13, from the rezoning-PDD review, allows for the north setback to be 15' and the south setback to be 14'. Setbacks meet the ordinance requirement.*
- Rear Yard Setback - east: ~700' (25' required)
- FAR: 0.06 (3.0 or less required)
- Building Height: ~27', and ~33' feet with a cupola (35'-75' maximum)
- Landscaping: 10 trees are being removed as part of the construction project. There is not a landscape plan for tree replacement at this time. I-3 without a PDD overlay requires 1 tree per 10,000 SF.

2. Traffic, Parking, and Loading

The PIP does not propose additional driveway connections to Fort Howard AV, parking lots, or loading areas. Due to the project scale and location, a traffic impact analysis was not required for the PIP. However, the drive lane area near the new RV dump station includes the addition of three drive-through lanes to accommodate access to the RV dump station. The addition does not extend into other existing drive lanes on the fairgrounds.

Due to the nature of the fairgrounds, existing parking is accommodated on grassy areas for the property with gravel drive lanes. Based on review and approval of the General Development Plan, future development of drive lanes,

and including the existing drive lanes, will require a hard surface and not gravel.

3. <u>Architecture and Site Design Standards</u>

Building Design & Materials
The restroom is located at the south central end of the property and the RV dump station lies at the northcentral end. Both will be difficult to see from Fort Howard Avenue but will be visible from an adjacent property.

Note: The RV dump station does not include a building with façade materials.

The design and material for the restroom were selected to blend in and complement adjacent existing buildings on the fairgrounds with a rural feel. The use of metal on the restroom on all four sides was approved by Plan Commission on August 24, 2020 and by Common Council on September 15, 2020 as part of the General Development Plan. The use of the proposed masonry is a permitted material in the I-3 District.

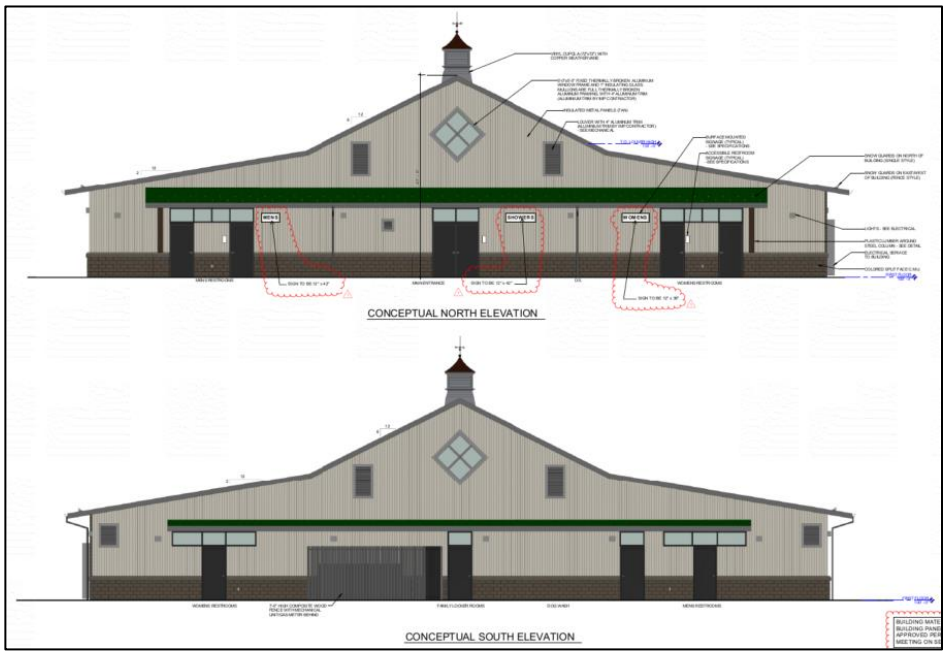

Mechanical units are located on the rear (south) of the building and are appropriately screened using a brown poly-material fence enclosure.

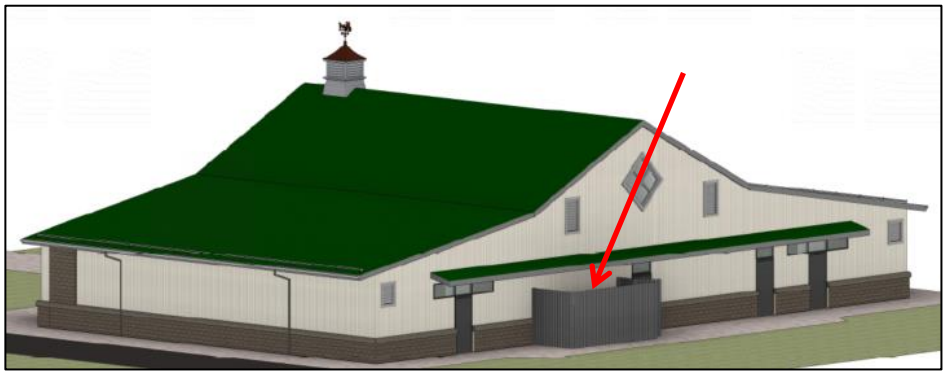

Landscape Plan

The PIP does not include a landscape plan. 10 trees will be lost with the redesign of the restroom area and approximately 5 trees will be retained on the north side of the building. There is no tree loss near the proposed RV dump station. The PIP does not include a plan for tree replacement.

North side of Restroom

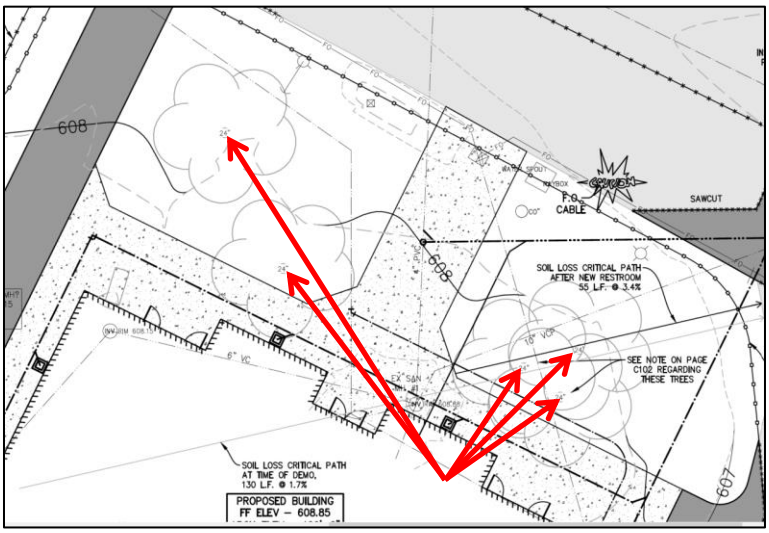

RV Dump Station

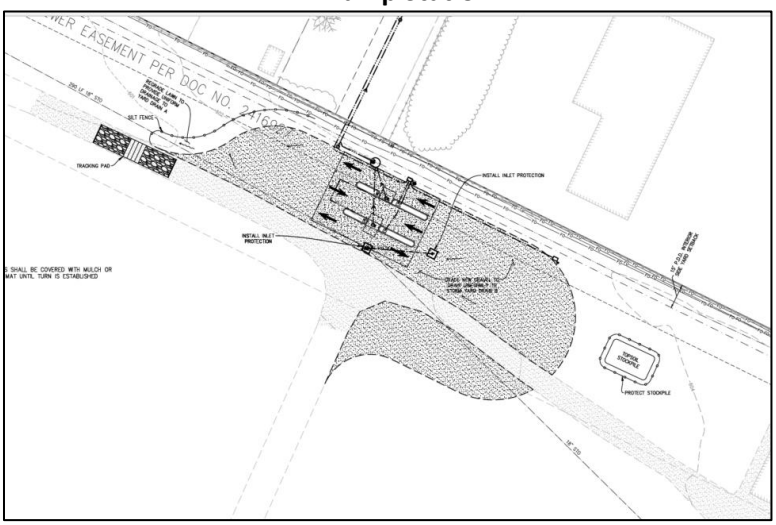

Garbage Enclosure
The PIP does not include a review of a garbage enclosure.

Exterior Lighting
Exterior lighting has been reviewed for approval by the Engineering Department.

4. <u>Signage</u>
There is no new signage proposed for the PIP, except for directional signage on the restroom. Directional signage does not require Plan Commission approval for a permit; directional signage is reviewed by Inspection staff.

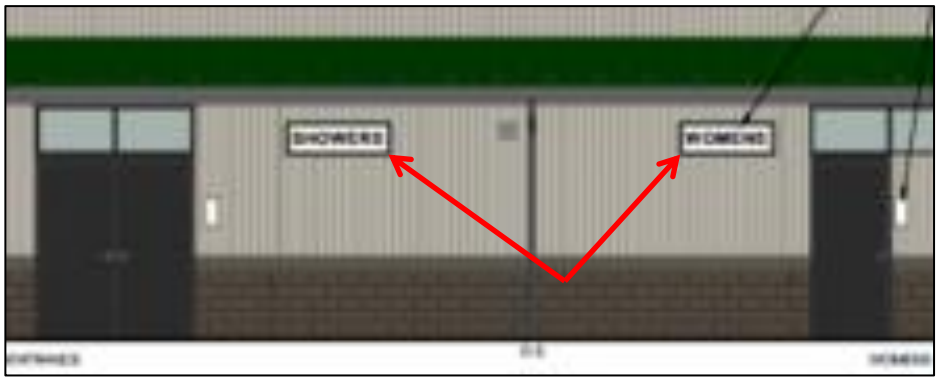

5. <u>Pedestrian/Bicycle Circulation</u>
A sidewalk system that surrounds the restroom has been added with short connections to the north, east, and southwest. Property-wide pedestrian interconnectivity is provided via an existing walking and drive lane system with no additions proposed.

6. <u>Construction Time Schedule</u>
The project included early start permits that were obtained for site preparation and foundations in October 2020. The remainder of the construction is expected to begin in November with completion expected in 2021.

STAFF COMMENTS: The following staff comments are conditions that need to be acknowledged or addressed via resubmittals, prior to final approval of the PIP.

Engineering:
1. Show tracking pad and erosion mat as indicated on the bathhouse erosion control plan sheet C105.
2. Erosion mat not shown on dump station erosion control plan sheet C110
3. Provide a copy of easement with GBMSD across parcel WD-56 prior to work start.
4. Plan revisions must be clearly bubbled on next submission.
5. Clearly identify on the plans if the existing water lines are to be reused at the bathhouse.
6. Prior to obtaining occupancy permits:
    a. If the water meter is to change in size, or a meter larger than 1-inch is needed, advance notice shall be provided to the water department. Large meters require special order.
    b. Must submit SWMP report and plan as indicated.

Fire: None.

Forestry: None.

Health: None.

Planning:

1. It is strongly recommended that the three subject parcels be combined.

Inspection: None.

REVIEW PROCESS: A Precise Implementation Plan project is part of a multiphase review process as follows:

- Plan Commission Pre Application Review.
  - *Completed July 2020.*
- Plan Commission Rezoning and General Plan Review.*
  - *Approved August 24, 2020.*
- Class II Public Hearing Notice.
  - *Completed September 1, 2020 and September 8, 2020.*
- Common Council Public Hearing and Ordinance Review.
  - *Approved September 15, 2020.*
- Plan Commission Precise Implementation Plan (PIP) Review.*
  - *Scheduled October 26, 2020.*
- Common Council Precise Implementation Plan (PIP) Review.
  - *Anticipated November 4, 2020 (Wednesday).*

*Neighbor notification within 300' of project.

STAFF RECOMMENDATION: Staff recommends APPROVAL of the Precise Implementation Plan (PIP) for a new restroom and new RV dump station at 1500 Fort Howard AV, submitted for the Brown County Fairgrounds, subject to compliance with the conditions and comments from the 'staff comments' section of this report and the conditions referenced in the 'Rezoning and General Development Plan' section *(Ordinance #20-13)* of this report.

DE PERE RUNS DEEPER	**CITY OF DE PERE** **APPLICATION FOR REZONING** **Planned Development District**	**Fee:** $ 305.00 **Receipt #:** **Date:**

Read all instructions provided before completing. If additional space is needed, attach additional pages. Type or use black ink.

SECTION 1: Applicant / Permittee Information

Applicant Name (Ind., Org. or Entity)	Authorized Representative	Title	
Brown County	Matt Kriese	Brown County Parks Director	
Mailing Address	**City**	**State**	**ZIP Code**
P.O. Box 236000	Green Bay	WI	54305
Email Address	**Phone Number (incl. area code)**	**Fax Number (incl. area code)**	
Matt.Kriese@browncountywi.gov	920-448-4465		

SECTION 2: Landowner Information (complete these fields when project site owner is different than applicant)

Name (Ind. Org. or Entity)	Contact Person	Title	
Brown County	Matt Kriese	Brown County Parks Director	
Mailing Address	**City**	**State**	**ZIP Code**
P.O. Box 23600	Green Bay	WI	54305
Email Address	**Phone Number (incl. area code)**	**Fax Number (incl. area code)**	
Matt.Kriese@browncountywi.gov	920-448-4465		

SECTION 3: Project or Site Location

Project Address/Description	Parcel Number(s):
Brown County Fair Grounds - 1500 Ft. Howard Ave.	39-6005671

SECTION 4: Proposed Rezoning Use

Existing Zoning:	I-3 (With Planned Development District Overlay)		
Proposed Zoning:	Update PDD overlay		
Adjacent Zoning: North	Adjacent Zoning: South	Adjacent Zoning: West	Adjacent Zoning: East
R-1 and I-3	R-2	B-2 and B-3	Fox River
Present Use of Parcel	Fair grounds, camping and special events		
Proposed Use of Parcel	Use to remain as is.		

SECTION 5: Certification and Permission

Certification: I hereby certify that I am the owner or authorized representative of the owner of the property which is the subject of this Permit Application. I certify that the information contained in this form and attachments is true and accurate. I certify that the project will be in compliance with all permit conditions. I understand that failure to comply with any or all of the provisions of the permit may result in permit revocation and a fine and/or forfeiture under the provisions of applicable laws.

Permission: I hereby give the City permission to enter and inspect the property at reasonable times, to evaluate this notice and application, and to determine compliance with any resulting permit coverage.

Name of Owner/Authorized Representative (please print)	Title	Phone Number
Matt Kriese	Brown County Parks Director	920-448-4465
Signature of Applicant		**Date Signed**
Matt Kriese		08/03/2020

Attached additional sheets if necessary.

ORDINANCE #20-13

REZONING CERTAIN PROPERTY FROM I-3 PDD GENERAL INDUSTRIAL DISTRICT WITH A PLANNED DEVELOPMENT DISTRICT OVERLAY TO REVISED I-3 PDD
(Parcels WD-57, WD-67 and WD-70-1; 1500 Fort Howard Avenue)

WHEREAS, the Common Council of the City of De Pere, having reviewed the recommendation of the City Plan Commission regarding the proposed change in zoning classification for the property described below and having scheduled a public hearing then to be decided by the Common Council; and

WHEREAS, the City Clerk, having published a Class 2 Notice of Public Hearing regarding such proposed zoning change and, pursuant thereto, a public hearing having been held on the 15th day of September, 2020 at 7:35 p.m. and the Common Council having heard all interested parties or their agents and attorneys;

NOW, THEREFORE, the Common Council of the City of De Pere, Wisconsin, do ordain as follows:

Section 1. That the following described property located at the Brown County Fairgrounds:

Parcel WD-57

Assessor's plat of West De Pere, that part of parcel D of subdivision of Lot 97, commencing at intersection east line of Highway 41 and south line, thence S64ºE along south line 1428.5 feet, thence N26ºE 100 feet, thence N64ºW 1364 feet to west line of Highway 41, thence S 119 feet to the point of beginning

Parcel WD-67

Assessor's plat of West De Pere, parcel I of Lot 98

Parcel WD-70-1

Northerly 200 feet of Lot 4 of subdivision of Private Claim 26 West Side Fox River lying easterly of old Highway 41

shall be and the same are hereby rezoned from the present zoning classification of I-3 PDD, General Industrial District with a Planned Development District, to Revised I-3 PDD, as set forth in and regulated by the provisions of §14-49 and §14-59 De Pere Municipal Code, as follows:

1. The use of an RV dump station is approved as a permitted use, with the following allowances:
    a. Reducing transitional yard for RV dump station from 50' to 15';
    b. Allowing a dustproof gravel base for drive lanes;
    c. Potential combining of parcels as certain permits may not be obtainable if final Precise Implementation Plan site location straddles a property line.
2. The restroom is a permitted use, with the following allowances:
    a. Eliminating transitional yard requirement for restroom;
    b. Reducing side yard setback from 25' to 14' for restroom building;
    c. Permitting the use of metal materials on all four facades of the restroom building.
3. All 58 existing campsite locations must be identified on the Precise Implementation Plan submittal for this project.
4. Brown County Fairground Master Plan must be updated to reflect new structure locations.
5. The driveway surfaces shall be paved as improvements are made.
6. Final Master Plan approvals should also be submitted to the City for approval/acceptance.
7. Any use that ceases for a period of 12 months requires a new General Development Plan and Precise Implementation Plan approval.
8. Compliance with all state and local laws and regulations, including compliance with all the provisions of Chapter 14, De Pere Municipal Code.

Section 2. The City Clerk is directed to amend the City of De Pere Zoning Map in conformity with the provisions of this ordinance.

Section 3. All other ordinances in conflict herewith are hereby repealed.

Section 4. This ordinance shall take effect upon its passage and publication according to law.

Adopted by the Common Council of the City of De Pere, Wisconsin, this 15th day of September, 2020.

APPROVED:

James G. Boyd, Mayor

ATTEST:

Carey E. Danen, City Clerk

Ayes: 8
Nays: 0
Board/Committee Approval: 8/24/2020
Publication Date: 9/18/2020
Effective Date: 9/19/2020

McMAHON ENGINEERS ARCHITECTS

Brown County Established 1818

Brown County - Fair Grounds - Site Plan Submittal

October 19, 2020

Engineering related comments and concerns:	Response
General	
Text is too small for half size plans - plan wide.	Discussed via conference call with City of DePere and it was agreed that text was okay at current size
Plan revisions should be clearly bubbled on next submission.	Revised submittal will have sheets clouded as revisions
Sheet 1 of 2	
Provide owner information.	Provided on revised C101
Sheet C101	
Erosion control plans should be their own sheet, not included with utility or grading plans. Please move Erosion and Sediment Control Plan notes to the new erosion control plan.	Provided on New page C105 and C110
Show stockpile locations and appropriate erosion control.	Note added to C105 and C110. No stockpiles will be necessary at restroom site.
Non-channel erosion mat and tracking pad/tire washing are not shown on erosion control plan.	Note added to C105. Tracking pad duties and tire washing will be performed on existing paved surface at restroom site.
Sheet C102	
Show water lines on civil, utility plans. These should not be shown on plumbing plans only.	Revisions provided on C102 and C103
How is sanitary sewer at existing building to the north being handled. Is temporary lateral connection going to be provided prior to sanitary manhole removal per comment #6. Please indicate work staging on plan.	The connection is seasonal. No flow is expected at the time of construction. Notes provided on C103
'4" PVC' comment floating in middle of trees.	Revised as requested
Sheet C103	

Eliminate note #6 - water lines should be shown on Civil, utility site plan.	Note #6 is revised, water lines are shown on C102 and C103
Separate this sheet into three different sheets - 1. Grading Plan 2. Utility Plan 3. Erosion Control Plan. There are too many elevations called out and the plan is difficult to read, especially on the east side of the building.	Revised as requested
Provide proposed contour lines on new grading plan.	Revised as requested on C104
Provide additional grade shots of grassed area to the west of the new structure. Water flow is not clear on this side of the building.	Existing drainage direction is noted on C104.
Provide WisDNR soil loss sediment discharge calculations and corresponding map with new Erosion Control Plan.	Calculations will be forwarded, not part of drawings.
Provide proposed pipe lengths on utility plan.	Revised as requested on C103
'12" VCP' comment floating to the east of sanitary sewer connection with 8"x12" fernco.	Revised as requested
Change in pipe diameters should be made at structures, not with fernco per NR 110.13(3). Connection to 12-inch sanitary line should not be made with an 8"x12" fernco.	Revised on C103. Manhole relocated. Prior design was predicated on County replacing 12" VCP with 8" PVC at a future date.
Sheet C106	
Label Dunning Drive and City right-of-way.	Revised as requested on C108
Provide note stating the following: "Obtain excavation permit through the City of De Pere Public Works Department prior to any work in the right-of-way on Dunning Drive. Permit shall be submitted a minimum of 2-weeks prior to work start. Contact De Pere Public Works at 920-339-4061 to obtain permit.	Revised as requested on C109
Sheet C107	
Provide site statistics for change in impervious area. Sites with cumulative addition of 20,000 square feet or greater of impervious surfaces after the adoption date February 3, 2009, are required to satisfy the storm water performance standards of Chapter 26 of the City of De Pere municipal code. It looks like the proposed work may push this site over the 20,000 square foot threshold. Approximately 10,000 square feet looks to have been added with the new gravel drive after 2014.	Stormwater treatment and report to follow later as separate submittal.
Provide copy of easement with GBMSD across parcel WD-56 prior to work start.	Draft can be forwarded separate from plan set.

Provide note stating the following: "Contact De Pere Water Department at 920-339-4063 a minimum of one week in advance to schedule water connection to water main on Dunning Drive."	Revised as requested on C109
Provide water meter size.	Water meter is part of the plumbing package.
Provide note stating the following: "Obtain excavation permit through the City of De Pere Public Works Department prior to any work in the right-of-way on Dunning Drive. Permit shall be submitted a minimum of 2-weeks prior to work start. Contact De Pere Public Works at 920-339-4061 to obtain permit.	Revised as requested on C109
Provide note stating the following: "Contact De Pere Public Works at 920-339-4061 a minimum of one week in advance to schedule sanitary sewer connection on Dunning Drive."	Revised as requested on C109
Provide note stating the following: "All concrete work in right-of-way on Dunning Drive must be completed by a City of De Pere Licensed Concrete Worker. Contact De Pere Public Works at 920-339-4061 to obtain concrete workers license."	Revised as requested on C109
Show north arrow.	Revised as requested
Planning Related Comments and Concerns	
Add a statistics section that includes site square footage, percent site coverage, percent open space, and floor area ratio, and gross square footage of existing and proposed building. Typically parking calculations should be included too but may be difficult to calculate.	Site statistics for existing and proposed conditions will be provided as map separate from plan set.
Provide dimensions for the directional signage on the shower building.	Signage for Men's, Women's and Shower's to be 12" high
Sheet C107 & Sheet C109: Provide a scaled dimension for the PDD 15' interior side yard setback on the north property line.	Revised as requested on C108 thru C110
Sheet C107 & Sheet C109: Label the new gravel as being dustproof. Identify the type of gravel. Also label on the Gravel Drive Detail (Sheet C109).	Revised as requested. County to cover with recycled asphalt millings per detail on C112
Sheet C107 & Sheet C109: Provide note that states that driveway surfaces shall be paved as improvements are made.	Revised as requested on C109
Strongly recommend combining the parcels as it could lead to problems with obtaining certain permits.	County has chosed not to perform this activity at this time.
provide plan page that properly identifies the property with all structures (including proposed) with the location of all 58 existing campsites (numbered).	Drawing illustrating 58 existing campsites will be provided as map separate from plan set.

Any use that ceases for a period of 12 months requires a new General Development Plan and Precise Implementation Plan approval (Ordinance #30-13).	County is duly notified.

Soil Loss & Sediment Discharge Calculation Tool

for use on Construction Sites in the State of Wisconsin

DRAFT VERSION 03-27-2015

WISCONSIN DEPT. OF NATURAL RESOURCES

YEAR 1

Developer: Brown County Parks Dept

Project: Restroom reconstruction

Date: 10/16/2020

County: Brown

Version 1.0

Land Disturbing Activity	Begin Date	End Date	Period % R	Annual R Factor	Sub Soil Texture	Soil Erodibility K Factor	Slope (%)	Slope Length (feet)	LS Factor	Land Cover C Factor	Soil loss A (tons/acre)	Sediment Control Practice	Sediment Discharge (tons/acre)
Bare Ground	11/15/2020	4/10/2021	7.4%	100	Silty Clay	0.28	1.7%	130	0.19	1.00	0.4	Silt Fence	0.2
Bare Ground	4/10/2021	5/20/2021	10.7%	100	Silty Clay	0.28	3.4%	55	0.26	1.00	0.8	Silt Fence	0.4
Seed with Mulch or Er	5/20/2021	7/20/2021	39.8%	100	Silty Clay	0.28	3.4%	55	0.26	0.10	0.3	Silt Fence	0.0
End	7/20/2021	—	—	—	—	—	3.4%	55	0.26	—	—	Silt Fence	0.0
		—	—	—	—	—	3.4%	0	—	—	—		0.0
		—	—	—	—	—	0.0%	0	—	—	—		0.0
										TOTAL	**1.5**	**TOTAL**	**0.5**
												% Reduction Required	**NONE**

Notes:

See Help Page for further descriptions of variables and items in drop-down boxes.
The last land disturbing activity on each sheet must be 'End'. This is either 12 months from the start of construction or final stabilization.
For periods of construction that exceed 12 months, please demonstrate that 5 tons/acre/year is not exceeded in any given 12 month period.

NOTE: THIS TOOL ONLY ADDRESSED SOIL EROSION DUE TO SHEET FLOW. MEASURES TO CONTROL CHANNEL EROSION MAY ALSO BE REQUIRED TO MEET SEDIMENT DISCHARGE REQUIREMENTS.

Recommended Permanent Seeding Dates:

4/15-6/1	and	8/1-8/21	Turf, introduced grasses and legumes
Thaw-6/30			Native Grasses, forbs, and legumes

Designed By:	Ronald J Wolf
Date	10/16/2020

W:\PROJECTS\B0633\62000119\Dept\Muni\Plan Review\SoilLossTool.xls

10/18/2020 10:34:29 PM

OVERALL SITE PLAN

1" = 60'-0"

NORTH

1

2020 PROJECTS INCLUDE THE FOLLOWING

1. NEW RESTROOM FACILITY TO REPLACE EXISTING FACILITY
2. NEW RV-DUMPSTATION TO REPLACE EXISITNG

PROEJCTS SCHEDULED TO BE COMPLETED IN 2021, WITH AN ANTICIPATED COMPLETION DATE OF MAY

McMAHON
ENGINEERS ARCHITECTS
McMAHON ASSOCIATES, INC.
1445 McMAHON DRIVE NEENAH, WI 54956
Mailing: P.O.BOX 1025 NEENAH, WI 54957-1025
Tel: (920) 751-4200 Fax: (920) 751-4284
www.mcmgrp.com

McMahon Associates, Inc. provides this drawing & data, regardless of form or media, as instruments of service. All rights including copyrights are retained by McMahon Associates, Inc. The client and subtenant agrees to the fullest extent permitted by law to indemnify and hold McMahon Associates, Inc. harmless for any reuse of or changes made to the original drawing or data without prior written consent by McMahon Associates, Inc.

NO.	DATE	REVISION

BROWN COUNTY FAIR GROUNDS: RESTROOM AND DUMP STATION
BROWN COUNTY 1500 FT HOWARD AVE, DE PERE, WI 54115
OVERALL SITE PLAN AND CAMPSITE MAP

DESIGNED	DRAWN
MJM	KJC

PROJECT NO. B0633 6-20-00119

DATE OCTOBER 19, 2020

SHEET NO. A101

C:\Users\kchevalier.MCM\OneDrive - McMahon Associates\Documents\Brown County - Fair Grounds_Arch_kchevalier@mcmgrp.com.rvt

7/21/2020 7:10:15 AM

BUILDING INFORMATION

BUILDING USE & OCCUPANCY:	B "BUSINESS" RESTROOM AND SHOWER FACILITY
CONSTRUCTION TYPE:	TYPE IIB
BUILDING AREA:	6,248 SF
BUILDING HEIGHT:	27'-0" ABOVE GRADE TO RIDGE

CONCEPTUAL FIRST FLOOR PLAN

1/4" = 1'-0"

NORTH

McMAHON
ENGINEERS ARCHITECTS
McMAHON ASSOCIATES, INC.
1445 McMAHON DRIVE NEENAH, WI 54956
Mailing: P.O.BOX 1025 NEENAH, WI 54957-1025
Tel: (920) 751-4200 Fax: (920) 751-4284
www.mcmgrp.com

McMahon Associates, Inc. provides this drawing and data, regardless of form, as instruments of service. All rights including copyrights are retained by McMahon Associates, Inc. The client and recipient agrees to the fullest extent permitted by law to indemnify and hold McMahon Associates, Inc. harmless for any reuse of or changes made to the original drawing or data without prior written consent by McMahon Associates, Inc.

NO.	DATE	REVISION

BROWN COUNTY FAIR GROUNDS: RESTROOM AND DUMP STATION
BROWN COUNTY 1500 FT HOWARD AVE, DE PERE, WI 54115
CONCEPTUAL FIRST FLOOR PLAN

DESIGNED	DRAWN
MJM	KJC

PROJECT NO. B0633 6-20-00119

DATE JULY 21, 2020

SHEET NO. A102

C:\Users\kchevalier.MCMOneDrive - McMahon Associates\Documents\Brown County - Fair Grounds_Arch_kchevalier@mcmgrp.com.rvt

7/21/2020 7:10:33 AM

FENCE ENCLOSURE FOR MECHANICAL UNIT (SIMILAR)

STANDING SEAM INSULATED METAL ROOF PANELS (EXAMPLE - FOREST GREEN OR SIMILAR)

ADOBE FROM COUNTY MATERIALS "OR SIMILAR:

SPLIT FACE BLOCK "ADOBE" OR SIMILAR

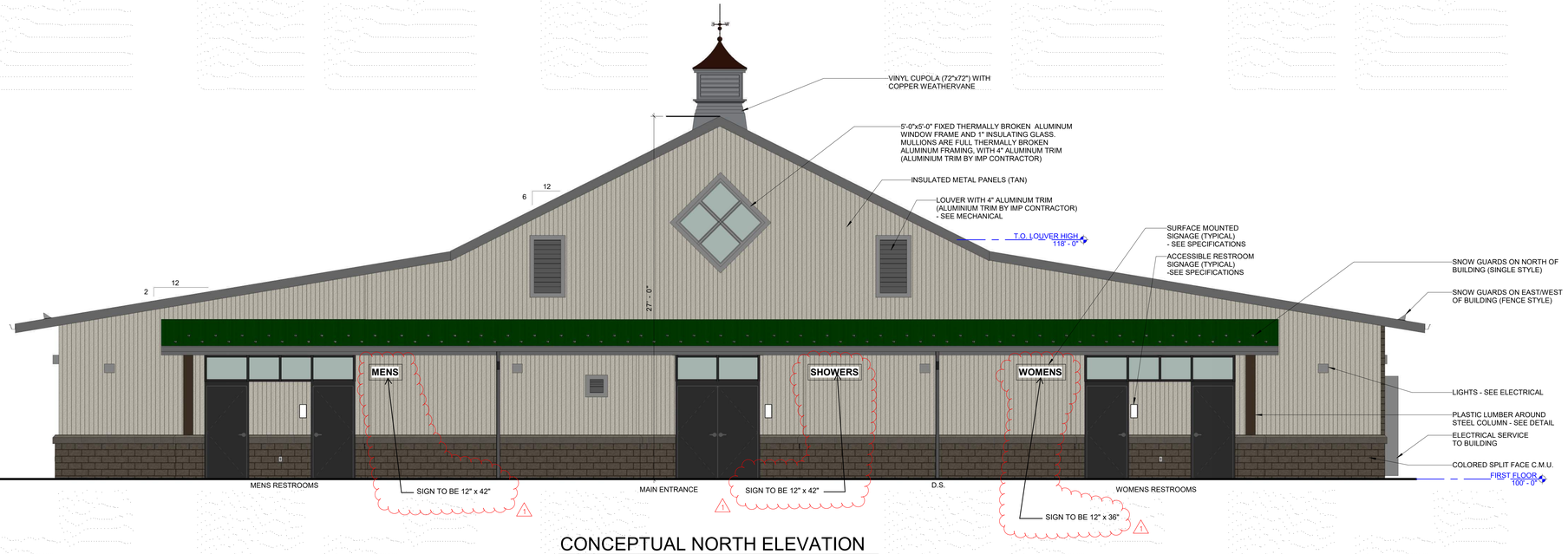

CONCEPTUAL NORTH ELEVATION

CONCEPTUAL SOUTH ELEVATION

BUILDING MATERIALS - METAL BUILDING PANELS WITH MASONRY APPROVED PER COMMON COUNCIL MEETING ON SEPTEMBER 15, 2020

McMAHON
ENGINEERS ARCHITECTS
McMAHON ASSOCIATES, INC.
1445 McMAHON DRIVE NEENAH, WI 54956
Mailing: P.O.BOX 1025 NEENAH, WI 54957-1025
Tel: (920) 751-4200 Fax: (920) 751-4284
www.mcmgrp.com

McMahon Associates, Inc. provides this drawing & data, regardless of form, as instruments of service. All rights including copyrights are retained by McMahon Associates, Inc. The reader or user of this document agrees to the fullest extent permitted by law to indemnify and hold McMahon Associates, Inc. harmless for any reuse of or changes made to the original drawing or data without prior written consent by McMahon Associates, Inc.

NO.	DATE	REVISION

BROWN COUNTY FAIR GROUNDS: RESTROOM AND DUMP STATION
BROWN COUNTY 1500 FT HOWARD AVE, DE PERE, WI 54115
CONCEPTUAL EXTERIOR ELEVATIONS

DESIGNED	DRAWN
MJM	KJC

PROJECT NO. B0633 6-20-00119
DATE JULY 21, 2020
SHEET NO. A103

C:\Users\kchevalier.MCM\OneDrive - McMahon Associates\Documents\Brown County - Fair Grounds_Arch_kchevalier@mcmgrp.com.rvt

7/21/2020 7:12:21 AM

CONCEPTUAL 3D VIEW (NORTH)

CONCEPTUAL 3D VIEW (SOUTH)

McMAHON
ENGINEERS ARCHITECTS
McMAHON ASSOCIATES, INC.
1445 McMAHON DRIVE NEENAH, WI 54956
Mailing: P.O.BOX 1025 NEENAH, WI 54957-1025
Tel: (920) 751-4200 Fax: (920) 751-4284
www.mcmgrp.com

McMahon Associates, Inc. provides this drawing and data, regardless of form, as instruments of service. All rights including copyrights are retained by McMahon Associates, Inc. The recipient/user/client agrees to the fullest extent permitted by law to indemnify and hold McMahon Associates, Inc. harmless for any reuse of or changes made to the original drawing or data without prior written consent by McMahon Associates, Inc.

NO.	DATE	REVISIONS

BROWN COUNTY FAIR GROUNDS: RESTROOM AND DUMP STATION
BROWN COUNTY 1500 FT HOWARD AVE, DE PERE, WI 54115
CONCEPTUAL 3D VIEWS

DESIGNED	DRAWN
MJM	KJC

PROJECT NO. B0633 6-20-00119
DATE JULY 21, 2020
SHEET NO. A104

C:\Users\kchevalier.MCMDriveDrive - McMahon Associates\Documents\Brown County - Fair Grounds_Arch_kchevalier@mcmgrp.com.rvt

Brown County Established 1818

BROWN COUNTY FAIRGROUNDS

FAIRGROUNDS MASTER PLAN ▪ MASTER PLAN

1500 FORT HOWARD AVE ▪ DE PERE, WI 54115

REVISED MASTER PLAN: JULY 21, 2020

NORTH

0' 100' 200' 300'

DATE ▪ 10.17.2018
RETTLER PROJECT # ▪ 17.025

RETTLER corporation
▪ 3317 BUSINESS PARK DRIVE, STEVENS POINT, WI 54481
▪ TELEPHONE ▪ 715 - 341 - 2633, FAX ▪ 715 - 341 - 0431
▪ EMAIL ▪ INFO @ RETTLER.COM, WEBSITE ▪ WWW.RETTLER.COM

STANDARD ABBREVIATIONS

AC	ACRE	LT	LEFT
AGG	AGGREGATE	LVC	LENGTH OF VERTICAL CURVE
AH	AHEAD	MAINT	MAINTENANCE
ASPH	ASPHALT PAVEMENT	MAT'L	MATERIAL
AVG	AVERAGE	MAX	MAXIMUM
B-B	BACK TO BACK	MIN	MINIMUM
BEG	BEGIN	MH	MANHOLE
BIT	BITUMINOUS	MP	MILE POST
BK	BACK	NB	NORTHBOUND
B/L	BASE LINE	NO	NUMBER
BLDG	BUILDING	NOR	NORMAL
BM	BENCH MARK	OD	OUTSIDE DIAMETER
BOC	BACK OF CURB	OBLIT	OBLITERATE
BRG	BEARING	PAV'T	PAVEMENT
C-C	CENTER TO CENTER	PC	POINT OF CURVATURE
CY	CUBIC YARD	PCC	PORTLAND CEMENT CONCRETE OR POINT OF COMPOUND CURVATURE
C&G	CURB AND GUTTER		
CB	CATCH BASIN	PE	PRIVATE ENTRANCE
CE	COMMERCIAL ENTRANCE	PED	PEDESTAL
CHD	CHORD	PGL	PROFILE GRADE LINE
C/L	CENTER LINE	PI	POINT OF INTERSECTION
CL	CLASS (FOR CONC PIPE)	P/L	PROPERTY LINE
CMP	CORRUGATED METAL PIPE	PLE	PERMANENT LIMITED EASEMENT
CO	CLEAN OUT	PP	POWER POLE
CONC	CONCRETE	PRC	POINT OF REVERSE CURVATURE
CORR	CORRUGATED	PROP	PROPOSED
CP	CONTROL POINT	PSD	PASSING SIGHT DISTANCE
CR	CRUSHED	PSI	POUNDS PER SQUARE INCH
CS	CURB STOP	PT	POINT OF TANGENCY
CSW	CONCRETE SIDEWALK	PVC	POLYVINYL CHLORIDE OR POINT OF VERTICAL CURVATURE
CTH	COUNTY TRUNK HIGHWAY		
CULV	CULVERT	PVI	POINT OF VERTICAL INTERSECTION
D	DEPTH OR DELTA	PVT	POINT OF VERTICAL TANGENCY
DI	DUCTILE IRON	R	RADIUS
DIA	DIAMETER	RCP	REINFORCED CONCRETE PIPE
DIS	DISCHARGE	RD	ROAD
EA	EACH	REBAR	REINFORCEMENT ROD
EB	EASTBOUND	REM	REMOVE
EBS	EXCAVATION BELOW SUBGRADE	RECON	RECONSTRUCT
EG	EDGE OF GRAVEL	REQ'D	REQUIRED
ELEV	ELEVATION	R/L	REFERENCE LINE
ELEC	ELECTRIC	RP	RADIUS POINT
EMB	EMBANKMENT	RR	RAILROAD
EMAT	EROSION MAT	RT	RIGHT
ENT	ENTRANCE	R/W	RIGHT-OF-WAY
EOR	END OF RADIUS	SB	SOUTHBOUND
EP	EDGE OF PAVEMENT	SE	SUPERELEVATION
EXC	EXCAVATION	SF	SQUARE FEET
EX	EXISTING	SI	SLOPE INTERCEPT
EW	ENDWALL	STH	STATE TRUNK HIGHWAY
F-F	FACE TO FACE	SY	SQUARE YARD
FDN	FOUNDATION	SALV	SALVAGED
FE	FIELD ENTRANCE	SAN	SANITARY
FERT	FERTILIZER	SEC	SECTION
FG	FINISHED GRADE	SHLDR	SHOULDER
F/L	FLOW LINE	S/L	SURVEY LINE
FT	FOOT	SQ	SQUARE
FTG	FOOTING	STA	STATION
GRAV	GRAVEL	STD	STANDARD
GN	GRID NORTH	STO	STORM
GV	GAS VALVE	SW	SIDEWALK
HDPE	HIGH DENSITY POLYETHYLENE	TC	TOP OF CURB
HE	HIGHWAY EASEMENT	TEL	TELEPHONE
HMA	HOT MIX ASPHALT	TEMP	TEMPORARY
HP	HIGH POINT	TLE	TEMPORARY LIMITED EASEMENT
HT	HEIGHT	TV	TELEVISION
HYD	HYDRANT	TYP	TYPICAL
ID	INSIDE DIAMETER	UG	UNDERGROUND
IN	INCH	USH	U.S. HIGHWAY
INL	INLET	VAR	VARIES
INV	INVERT	VC	VERTICAL CURVE
IP	IRON PIPE	VERT	VERTICAL
JCT	JUNCTION	WB	WESTBOUND
LB	POUND	WM	WATER MAIN
LF	LINEAR FOOT	WV	WATER VALVE
LP	LIGHT POLE		

GENERAL NOTES

1. THE UTILITIES SHOWN IN PLAN AND PROFILE ARE INDICATED IN ACCORDANCE WITH AVAILABLE RECORDS. THE CONTRACTOR SHALL BE RESPONSIBLE FOR OBTAINING EXACT LOCATIONS AND ELEVATIONS OF ALL UTILITIES, INCLUDING ANY PRIVATE UTILITIES, FROM THE OWNERS OF THE RESPECTIVE UTILITIES. ALL UTILITIES SHALL BE NOTIFIED 72 HRS. PRIOR TO EXCAVATION.
2. PRIOR TO CONSTRUCTION, THE CONTRACTOR SHALL VERIFY PROPOSED SITE GRADES BY FIELD CHECKING TWO (2) BENCHMARKS AND A MINIMUM OF ONE (1) SITE FEATURE AS SHOWN ON THESE PLANS. THE CONTRACTOR SHALL IMMEDIATELY NOTIFY MCMAHON OF ANY VERTICAL DISCREPANCY.
3. EXISTING STREET RIGHT-OF-WAY AND INTERSECTING PROPERTY LINES ARE ESTABLISHED FROM FIELD LOCATED SURVEY MONUMENTATION, PREVIOUS SURVEYS, PLATS AND CURRENT PROPERTY DEEDS.
4. NO TREES OR SHRUBS ARE TO BE REMOVED WITHOUT PRIOR APPROVAL FROM THE OWNER.
5. A SAWED JOINT IS REQUIRED WHERE NEW HMA PAVEMENT MATCHES EXISTING ASPHALTIC CONCRETE SURFACE.
6. ALL CURB RADII SHOWN ON THE PLAN SHEETS ARE TO THE BACK OF CURB UNLESS OTHERWISE NOTED.
7. DIMENSIONS ARE TO THE BACK OF CURB UNLESS OTHERWISE NOTED.

THIS PLAN SET WAS CREATED WITH **CIVIL3D 2018**. MCMAHON'S "DISCLAIMER FOR TRANSFER OF ELECTRONIC FILES" FORM NEEDS TO BE SIGNED IF A COPY OF THE ELECTRONIC FILES ARE REQUESTED. MCMAHON MAKES NO REPRESENTATION REGARDING THE COMPATIBILITY OF THESE FILES WITH OTHER SOFTWARE, NOR DOES MCMAHON REPRESENT THAT THE FILES WILL CONVERT TO OTHER SOFTWARE WITHOUT ERROR.

STANDARD SYMBOLS (PLAN VIEW ONLY)

- 2" IRON PIPE FOUND
- 1 1/4" REBAR FOUND
- 1 1/4" x 30" IRON REBAR WEIGHING 4.30 LB/LF SET
- 1" (1.315 OD) IRON PIPE FOUND
- 1" IRON PIPE SET
- 3/4" IRON REBAR FOUND
- 3/4" IRON PIPE FOUND
- 3/4"x 24" IRON REBAR WEIGHING 1.5 LB/LF SET
- MAG NAIL FOUND
- MAG NAIL SET
- MAG SPIKE FOUND
- MAG SPIKE SET
- CHISEL CROSS FOUND
- CHISEL CROSS SET
- COUNTY MONUMENT
- CONCRETE MONUMENT FOUND
- CONTROL POINT HORIZONTAL
- CONTROL POINT VERTICAL
- SB or MW — SOIL BORING or MONITORING WELL
- POWER POLE
- POWER POLE W/GUY WIRE
- TELEPHONE OR TELEVISION PEDESTAL
- MB — MAILBOX
- SIGN
- RAILROAD CROSS BUCK
- RAILROAD GATE ARM
- RAILROAD TRACKS
- LIGHT POLE
- WOOD POLE
- TRAFFIC SIGNAL
- TRAFFIC SIGNAL MAST ARM
- CONIFEROUS TREE
- DECIDUOUS TREE
- TREE OR BRUSH LINE
- BED ROCK (IN PROFILE VIEW)
- HANDICAPPED PARKING STALL
- 763.34 — EXISTING SPOT ELEVATION
- × 750.00 — PROPOSED SPOT ELEVATION
- DRAINAGE HIGH POINT
- DRAINAGE DIRECTION
- EXISTING MANHOLE
- PROPOSED MANHOLE
- EXISTING INLET
- PROPOSED INLET
- EXISTING YARD DRAIN
- PROPOSED YARD DRAIN
- CO — EXISTING CLEAN OUT
- CO — PROPOSED CLEAN OUT
- EXISTING DOWNSPOUT
- PROPOSED DOWNSPOUT
- EXISTING WATER VALVE
- PROPOSED WATER VALVE
- EXISTING CURB STOP
- PROPOSED CURB STOP
- EXISTING FIRE HYDRANT
- PROPOSED FIRE HYDRANT
- PROPOSED WATER FITTING
- PROPOSED WATER REDUCER
- PROPOSED ENDCAP
- GAS VALVE

- T — TELEPHONE CABLE - BURIED
- E — ELECTRIC CABLE - BURIED
- OHU — UTILITIES - OVERHEAD
- FO — FIBER OPTIC CABLE - BURIED
- G — GAS MAIN
- TV — CABLE TELEVISION - BURIED
- DITCH LINE
- STREET C/L OR R/L
- PROPERTY LINE
- RIGHT-OF-WAY LINE
- SECTION LINE
- 746 — EXISTING CONTOURS
- 746 — PROPOSED CONTOURS
- FM — EXISTING FORCEMAIN SEWER
- SAN — EXISTING SANITARY SEWER
- SAN — PROPOSED SANITARY SEWER
- WM — EXISTING WATER MAIN
- WM — PROPOSED WATER MAIN
- STO — EXISTING STORM SEWER
- STO — PROPOSED STORM SEWER
- EXISTING CURB & GUTTER
- PROPOSED CURB & GUTTER
- PROPOSED REJECT CURB & GUTTER
- EXISTING CULVERT WITH END SECTIONS
- PROPOSED CULVERT WITH END SECTIONS
- BUILDING OUTLINE
- FENCE LINE
- SAW CUT REQ'D
- SILT FENCE
- GUARD RAIL
- DITCH CHECK
- INLET PROTECTION
- TRACKING PAD
- TURBIDITY BARRIER OR SHEET PILING
- SANDBAG COFFERDAM
- SLOPE INTERCEPT
- LIMITS OF DISTURBANCE

EXISTING	PROPOSED	
		ASPHALT PAVEMENT
		CONCRETE SIDEWALK/DRIVEWAY
		GRAVEL
		RIP-RAP (SIZE AS SPECIFIED)
		BRICK/PAVERS
		EROSION MAT

OWNER INFORMATION:
BROWN COUNTY PARK DEPT.
MATT KRIESE, DIRECTOR
PO BOX 23600
GREEN BAY WI 54305
(920) 448-4464
matt.kriese@browncountywi.gov

1

McMAHON
ENGINEERS ARCHITECTS
McMAHON ASSOCIATES, INC.
1445 McMAHON DRIVE NEENAH, WI 54956
Mailing: P.O.BOX 1025 NEENAH, WI 54957-1025
PH 920.751.4200 FX 920.751.4284 MCMGRP.COM

McMahon Associates, Inc. provides this plan, design, specification, form, or instrument of service, all rights therein and thereto are retained by McMahon Associates, Inc. The reproduction or alteration of this instrument without the express written consent of McMahon Associates, Inc. is prohibited. Any reuse, reuse of or changes made to the instrument without written consent or written consent by McMahon Associates, Inc.

NO.	DATE	REVISION

NO.	DATE	REVISION
1	10/19/20	REMOVAL OF EROSION CONTROL NOTES

BROWN COUNTY FAIR GROUNDS: RESTROOM FACILITY AND DUMP STATION
BROWN COUNTY 1500 FT HOWARD AVE, DE PERE, WI 54115
ABBREVIATIONS, SYMBOLS & NOTES

DESIGNED	DRAWN
RJW	MJA

PROJECT NO. B0633 6-20-00119

DATE JULY 15, 2020

SHEET NO. C101

rschmechel, W:\PROJECTS\B0633\62000119\CADD\Civil3D\Plan Sheets\Title-Notes-Details.dwg, c101 notes, Plot Date: 10/19/2020 12:05 PM, xrefs: (meter piping detail, x-prop shade brown county fairgrounds, x-exist shade brown county fairgrounds, x-exist topo brown county fairgrounds, x-prop info brown county fairgrounds, brown county fairgrounds bndry comps dwg, mcm conv field data_062320)

W:\PROJECTS\B0633\62000119\CADD\Civil3D\Plan Sheets\Title-Notes-Details.dwg, C101 Notes, 10/19/2020 12:05:43 PM, RSchmechel, 1:1

HORIZONTAL CONTROL POINTS			
POINT #	NORTHING	EASTING	DESCRIPTION
2	547602.28	85828.35	MAG NAIL
3	547695.56	85640.87	MAG NAIL
6	547513.33	85551.53	MAG NAIL
8	547445.09	85731.26	MAG NAIL

VERTICAL BENCHMARK CONTROL		
POINT #	ELEVATION	DESCRIPTION
4	606.40	HYDRANT TAG BOLT
5	610.86	HYDRANT TAG BOLT
7	611.07	HYDRANT TAG BOLT

20 10 0 20
SCALE – FEET

NORTH

1. – SAWCUT.
2. – CLEAR & GRUB TREES.
3. – REMOVE ASPHALT.
4. – REMOVE CONCRETE WATER VAULT. REMOVE DRAIN LINE TOWARDS SANITARY MH. SEE PLUMBING PLAN FOR NEW WATER SYSTEM.
5. – REMOVE BRICK PAVERS.
6. – REMOVE SANITARY MANHOLE, PLUG ALL EXISTING PIPING CONNECTIONS.
7. – REMOVE EXISTING SANITARY DUMP STATION AND ALL HARDWARE. PLUG DOWNSTREAM SANITARY CONNECTION.
8. – ABANDON EXISTING SANITARY LINE BY CAPPING EACH END.
9. – REMOVE ALL SANITARY LINES WITHIN 5' OF NEW BUILDING FOOTPRINT.
10. – VERIFY F.O. PULL BOX IS TRAFFIC RATED LID. INSTALL BOX FOR TIER 22 LOADING IF REQUIRED. ADJUST BOX TO MATCH PROPOSED CONCRETE GRADE. REMOVE FIBERGLASS MARKER POST.
11. – PEDESTAL OR ELECTRICAL EQUIPMENT TO BE REMOVED. SEE ELECTRICAL DRAWINGS.
12. – THREE EXISTING TREES MAY BE IMPACTED BY SIDEWALK CONSTRUCTION. PROTECT TREES TO EXTENT PRACTICIBLE BEFORE INSTALLATION OF SIDEWALK, CONFER WITH OWNER COUNTY FORESTER TO DETERMINE IF TREES NEED TO BE CLEARED AND GRUBBED DUE TO ROOT DAMAGE OR LIKELYHOOD OF LATER DISEASE. PRICE BID SHALL INCLUDE CLEANING AND GRUBBING.
13. – INSTALL 10' DIAMETER SNOW FENCE AROUND ALL TREES TO REMAIN TO PROTECT THEM FROM DAMAGE BY CONSTRUCTION EQUIPMENT.
14. – EXACT LOCATION, SIZE, MATERIAL AND DEPTH OF EXISTING WATER LINES IS NOT KNOWN BY THE OWNER. WATER SERVICE TO DUMP STATION IS TO BE ABANDONED. OTHER LINES TO BE RECONNECTED INSIDE OF THE NEW RESTROOM PER PLUMBING PLAN.

NOTES:
1. ALL SANITARY AND WATER LINE CONNECTIONS ASSOCIATED WITH THE PROJECT ARE SEASONAL USE. ASSUMING FALL 2020/WINTER 2021 CONSTRUCTION, NO TEMPORARY CONNECTIONS ARE NECESSARY PRIOR TO PUTTING THE NEW SYSTEM INTO SERVICE.

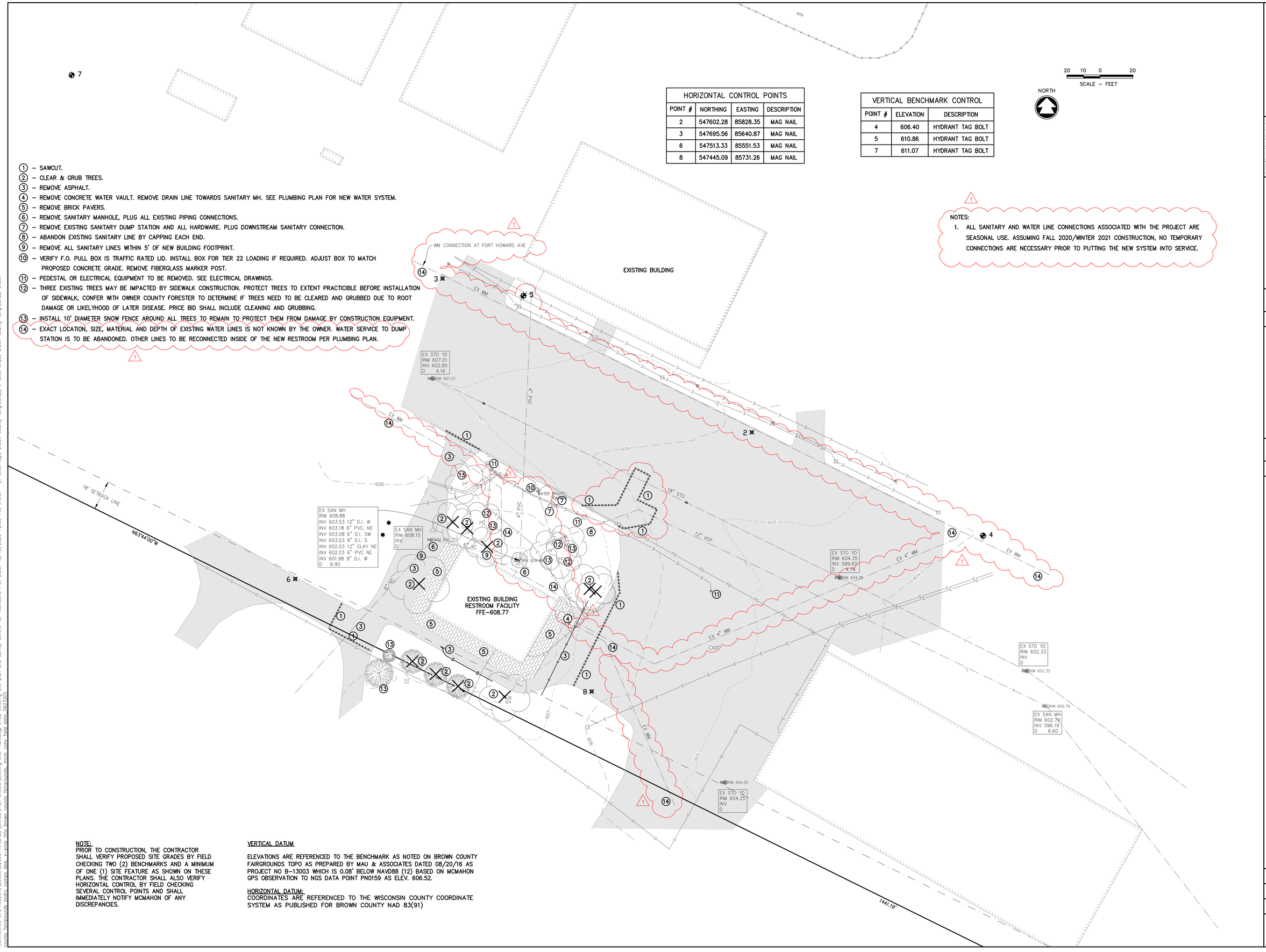

NOTE:
PRIOR TO CONSTRUCTION, THE CONTRACTOR SHALL VERIFY PROPOSED SITE GRADES BY FIELD CHECKING TWO (2) BENCHMARKS AND A MINIMUM OF ONE (1) SITE FEATURE AS SHOWN ON THESE PLANS. THE CONTRACTOR SHALL ALSO VERIFY HORIZONTAL CONTROL BY FIELD CHECKING SEVERAL CONTROL POINTS AND SHALL IMMEDIATELY NOTIFY MCMAHON OF ANY DISCREPANCIES.

VERTICAL DATUM

ELEVATIONS ARE REFERENCED TO THE BENCHMARK AS NOTED ON BROWN COUNTY FAIRGROUNDS TOPO AS PREPARED BY MAU & ASSOCIATES DATED 08/20/16 AS PROJECT NO B-13003 WHICH IS 0.08' BELOW NAVD88 (12) BASED ON MCMAHON GPS OBSERVATION TO NGS DATA POINT PN0159 AS ELEV. 606.52.

HORIZONTAL DATUM:
COORDINATES ARE REFERENCED TO THE WISCONSIN COUNTY COORDINATE SYSTEM AS PUBLISHED FOR BROWN COUNTY NAD 83(91)

McMAHON
ENGINEERS ARCHITECTS
McMAHON ASSOCIATES, INC.
1445 MARIGOLD STREET, WAUSAU, WI 54496
Mailing: P.O.BOX 1025 NEENAH, WI 54957-1025
PH 920.751.4200 FX 920.751.4284 MCMGRP.COM

McMAHON provides this drawing and data, regardless of form, as instruments of service. All rights including copyrights are retained by McMAHON. The client and/or recipient agrees to the fullest extent permitted by law to indemnify and hold McMAHON harmless for any reuse of or changes made to the original drawing or data without prior written consent by McMAHON.

NO.	DATE	REVISION
1	10/19/20	EXISTING WATERMAIN, LOCATIONS & UTILITY NOTES.

BROWN COUNTY FAIR GROUNDS: RESTROOM FACILITY AND DUMP STATION
BROWN COUNTY 1500 FT HOWARD AVE, DE PERE, WI 54115
EXISTING SITE PLAN/SURVEY CONTROL/DEMOLITION PLAN @ RESTROOM

DESIGNED	DRAWN
RJW	MJA

PROJECT NO.
B0633 6-20-00119

DATE
JULY 15, 2020

SHEET NO.
C102

rschmechel W:\PROJECTS\B0633\62000119\CADD\Civil3D\Plan Sheets\Existing Site Plan.dwg, c102 existing site plan and survey control for restroom, Plot Date: 10/19/2020 12:05 PM, xrefs: (x-exist topo brown county fairgrounds bndry comps dtm, x-prop info brown county fairgrounds, mcm conv field data 062320)
W:\PROJECTS\B0633\62000119\CADD\Civil3D\Plan Sheets\Existing Site Plan and Survey Control for Restroom, 10/19/2020 12:06:52 PM, RSchmechel, 1:1

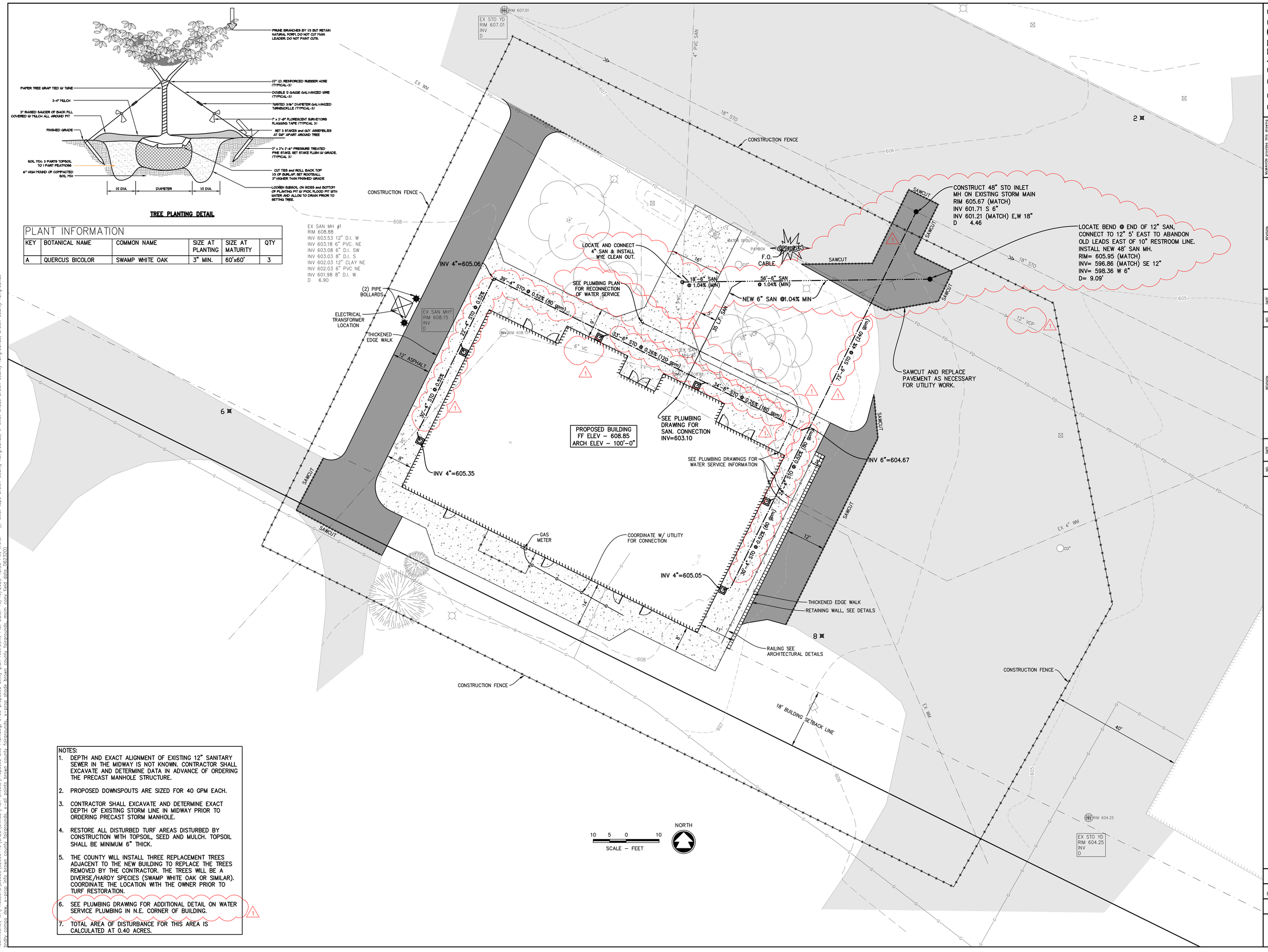

NOTES:

1. DEPTH AND EXACT ALIGNMENT OF EXISTING 12" SANITARY SEWER IN THE MIDWAY IS NOT KNOWN. CONTRACTOR SHALL EXCAVATE AND DETERMINE DATA IN ADVANCE OF ORDERING THE PRECAST MANHOLE STRUCTURE.
2. PROPOSED DOWNSPOUTS ARE SIZED FOR 40 GPM EACH.
3. CONTRACTOR SHALL EXCAVATE AND DETERMINE EXACT DEPTH OF EXISTING STORM LINE IN MIDWAY PRIOR TO ORDERING PRECAST STORM MANHOLE.
4. RESTORE ALL DISTURBED TURF AREAS DISTURBED BY CONSTRUCTION WITH TOPSOIL, SEED AND MULCH. TOPSOIL SHALL BE MINIMUM 6" THICK.
5. THE COUNTY WILL INSTALL THREE REPLACEMENT TREES ADJACENT TO THE NEW BUILDING TO REPLACE THE TREES REMOVED BY THE CONTRACTOR. THE TREES WILL BE A DIVERSE/HARDY SPECIES (SWAMP WHITE OAK OR SIMILAR). COORDINATE THE LOCATION WITH THE OWNER PRIOR TO TURF RESTORATION.
6. SEE PLUMBING DRAWING FOR ADDITIONAL DETAIL ON WATER SERVICE PLUMBING IN N.E. CORNER OF BUILDING. (1)
7. TOTAL AREA OF DISTURBANCE FOR THIS AREA IS CALCULATED AT 0.40 ACRES.

McMAHON
ENGINEERS ARCHITECTS
McMAHON ASSOCIATES, INC.
1445 McMAHON DRIVE NEENAH, WI 54956
Mailing: P.O.BOX 1025 NEENAH, WI 54957-1025
PH 920.751.4200 FX 920.751.4284 MCMGRP.COM

McMAHON provides this drawing and data, regardless of form, as instruments of service. All rights including copyrights are retained by McMAHON. The client and/or recipient agrees to the fullest extent permitted by law to indemnify and hold McMAHON harmless for any reuse of or changes made to the original drawing or data without prior written consent by McMAHON.

NO.	DATE	REVISION

NO.	DATE	REVISION
1	10/19/20	WATERMAIN AND SANITARY REVISIONS

BROWN COUNTY FAIR GROUNDS: RESTROOM FACILITY AND DUMP STATION
BROWN COUNTY 1500 FT HOWARD AVE, DE PERE, WI 54115
PROPOSED UTILITY PLAN RESTROOM

DESIGNED	DRAWN
RJW	MJA

PROJECT NO. B0633 6-20-00119

DATE JULY 15, 2020

SHEET NO. C103

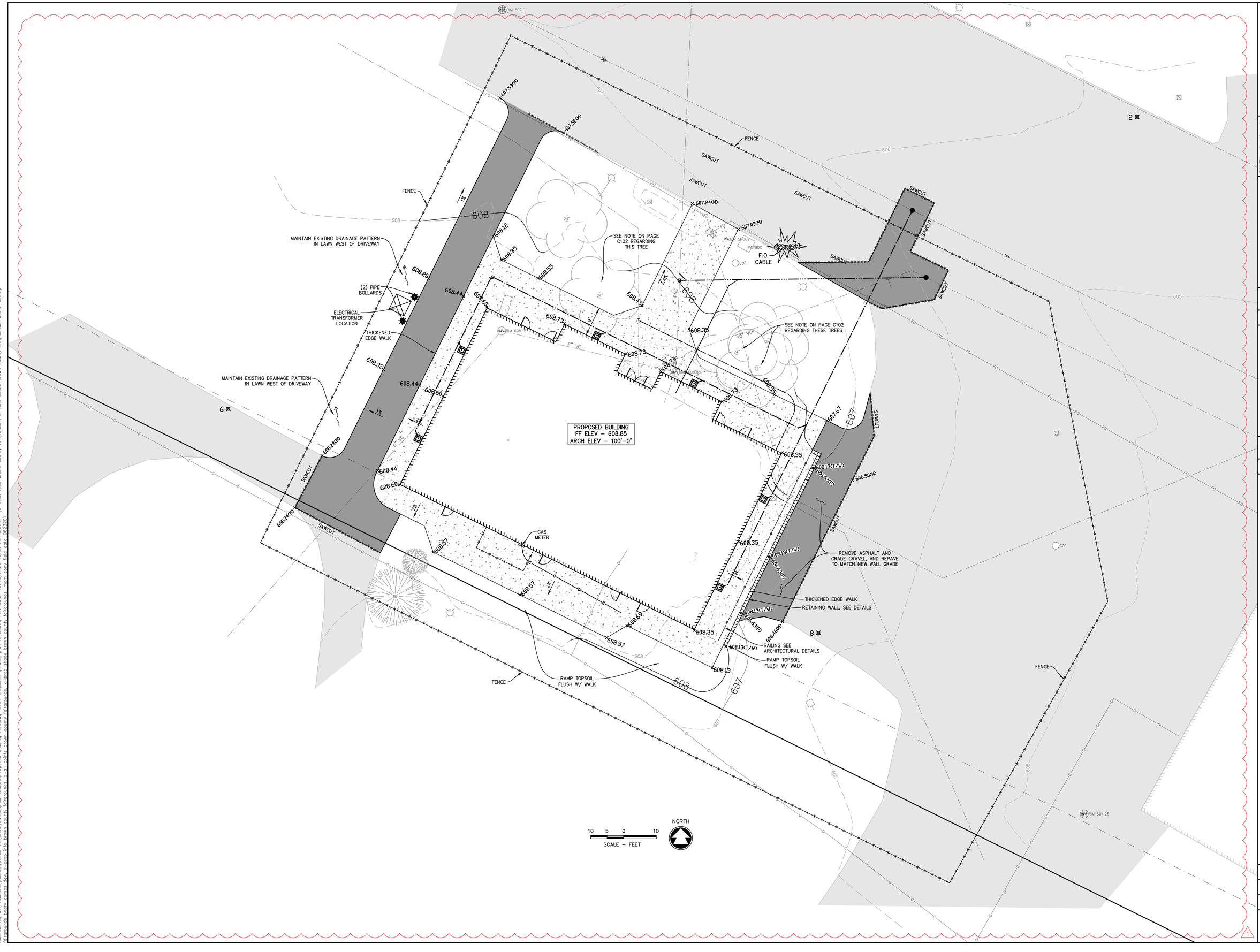

McMAHON
ENGINEERS ARCHITECTS
McMAHON ASSOCIATES, INC.
1445 McMAHON DRIVE NEENAH, WI 54956
Mailing: P.O.BOX 1025 NEENAH, WI 54957-1025
PH 920.751.4200 FX 920.751.4284 MCMGRP.COM

McMAHON provides this drawing and data, regardless of form, as instruments of service. All rights including copyrights are retained by McMAHON. The client and/or recipient agrees to the fullest extent permitted by law to indemnify and hold McMAHON harmless for any reuse of or changes made to the original drawing or data without prior written consent by McMAHON.

NO.	DATE	REVISION

NO.	DATE	REVISION
1	10/19/20	NEW SHEET

BROWN COUNTY FAIR GROUNDS: RESTROOM FACILITY AND DUMP STATION
BROWN COUNTY 1500 FT HOWARD AVE, DE PERE, WI 54115
PROPOSED GRADING PLAN RESTROOM

DESIGNED	DRAWN
–	–

PROJECT NO.
B0633 6-20-00119

DATE
JULY 15, 2020

SHEET NO.
C104

rezimenchel, W:\PROJECTS\B0633\62000119\CADD\Civil3D\Plan Sheets\Proposed Grading Plan.dwg, c104 proposed grading plan restroom, Plot Date: 10/19/2020 12:06 PM, xrefs: fairgrounds, bndry, comps dtex, x-prop info brown county fairgrounds, x-cell points brown county fairgrounds, x-prop shade brown county fairgrounds, mcm conv field data 062320) (x-exist topo brown county fairgrounds, x-exist shade brown county fairgrounds, brown county

W:\PROJECTS\B0633\62000119\CADD\Civil3D\Plan Sheets\Proposed Grading Plan.dwg, C104 Proposed Grading Plan Restroom, 10/19/2020 12:06:05 PM, RSzimenchel, 1:1

EROSION & SEDIMENT CONTROL PLAN

BEST MANAGEMENT PRACTICES:

THE CONTRACTOR IS RESPONSIBLE FOR FURNISHING, INSTALLING, MAINTAINING AND REMOVING BEST MANAGEMENT PRACTICES IN ACCORDANCE WITH WISCONSIN DEPARTMENT OF NATURAL RESOURCES (DNR) TECHNICAL STANDARDS. THESE STANDARDS MAY BE FOUND ON THE DNR WEBSITE AT http://www.dnr.wi.gov/runoff/stormwater/techstds.htm. RIP-RAP SHALL BE IN ACCORDANCE WITH SECTION 606, WIS-DOT STANDARD SPECIFICATIONS FOR HIGHWAY AND STRUCTURE CONSTRUCTION, LATEST EDITION, UNTIL TECHNICAL STANDARD 1065 IS COMPLETED BY THE DNR. THE MINIMUM BEST MANAGEMENT PRACTICES SPECIFIED FOR THIS PROJECT ARE AS FOLLOWS:

[ ] LAND APPLICATION OF POLYACRYLAMIDE (1050)
[ ] WATER APPLICATION OF POLYMERS (1051)
[X] NON-CHANNEL EROSION MAT (1052)
[ ] CHANNEL EROSION MAT (1053)
[ ] VEGETATIVE BUFFER (1054)
[ ] SEDIMENT BALE BARRIER (1055)
[X] SILT FENCE (1056)
[X] TRACKING PAD & TIRE WASHING (1057)
[X] MULCHING (1058)
[X] SEEDING (1059)
[X] STORM DRAIN INLET PROTECTION (1060)
[ ] DE-WATERING (1061)
[ ] DITCH CHECK (1062)
[ ] SEDIMENT TRAP (1063)
[ ] SEDIMENT BASIN (1064)
[ ] RIP-RAP (1065)
[ ] CONSTRUCTION DIVERSION (1066)
[X] GRADING PRACTICES (1067)
[X] DUST CONTROL (1068)
[ ] TURBIDITY BARRIER (1069)
[ ] SILT CURTAIN (1070)
[ ] MANUFACTURED PERIMETER PRODUCTS (1071)

THE CONTRACTOR SHALL COORDINATE CONSTRUCTION ACTIVITIES AND IMPLEMENT BEST MANAGEMENT PRACTICES TO PREVENT OR REDUCE ALL OF THE FOLLOWING:

A. DEPOSITION OR TRACKING OF SOIL ONTO STREETS BY VEHICLES.
B. DISCHARGE OF SEDIMENT INTO STORM WATER INLETS.
C. DISCHARGE OF SEDIMENT INTO ADJACENT STREAMS, RIVERS, LAKES AND WETLANDS.
D. DISCHARGE OF SEDIMENT FROM DITCHES AND STORM SEWERS THAT FLOW OFFSITE.
E. DISCHARGE OF SEDIMENT FROM DEWATERING ACTIVITIES.
F. DISCHARGE OF SEDIMENT FROM SOIL STOCKPILES EXISTING FOR 7 DAYS OR MORE.
G. DISCHARGE OF SEDIMENT FROM EROSIVE OUTLET FLOWS.
H. TRANSPORT OF CHEMICALS, CEMENT AND BUILDING MATERIALS BY RUNOFF.
I. TRANSPORT OF UNTREATED VEHICLE AND WHEEL WASH WATER BY RUNOFF.

THE CONTRACTOR SHALL IMPLEMENT THE FOLLOWING PREVENTATIVE MEASURES:

A. PRESERVE EXISTING VEGETATION WHENEVER POSSIBLE.
B. MINIMIZE SOIL COMPACTION AND PRESERVE TOPSOIL.
C. MINIMIZE LAND DISTURBANCES ON SLOPES OF 20% OR MORE.
D. MINIMIZE THE AMOUNT OF SOIL EXPOSED AT ANY ONE TIME.
E. DIVERT CLEAR WATER AWAY FROM EXPOSED SOILS.
F. TEMPORARILY STABILIZE EXPOSED SOILS THAT WILL NOT BE ACTIVE FOR 14 DAYS OR MORE. USE MULCHING, SEEDING, POLYACRYLAMIDE OR GRAVELING TO STABILIZE.
G. PERMANENTLY STABILIZE EXPOSED SOILS AS SOON AS POSSIBLE.
H. CONTRACTOR SHALL EDUCATE ITS EMPLOYEES AND SUBCONTRACTORS ABOUT PROPER SPILL PREVENTION AND RESPONSE PROCEDURES. IF A SPILL OCCURS, THE CONTRACTOR SHALL EVACUATE THE AREA AND IMMEDIATELY NOTIFY THE LOCAL MUNICIPALITY, FIRE DEPARTMENT OR 911 EMERGENCY SYSTEM. IF NO FIRE, EXPLOSION OR LIFE / HEALTH SAFETY HAZARD EXISTS, THE NEXT STEP IS TO CONTAIN THE SPILL AND PERFORM CLEANUP. USE DRY CLEANUP METHODS, NOT WET.

THE CONTRACTOR IS RESPONSIBLE FOR REPAIRING OR REPLACING BEST MANAGEMENT PRACTICES DESTROYED AS A RESULT OF CONSTRUCTION ACTIVITIES BY THE END OF THE WORK DAY. THE CONTRACTOR IS RESPONSIBLE FOR REPLACING BEST MANAGEMENT PRACTICES TEMPORARILY REMOVED FOR CONSTRUCTION ACTIVITY AS SOON AS THOSE ACTIVITIES ARE COMPLETED. THE CONTRACTOR IS RESPONSIBLE FOR REMOVING AND DISPOSING OF TEMPORARY BEST MANAGEMENT PRACTICES AFTER CONSTRUCTION IS COMPLETE AND PERMANENT VEGETATION IS ESTABLISHED.

INSPECTION & MAINTENANCE:

THE CONTRACTOR IS RESPONSIBLE FOR INSPECTING BEST MANAGEMENT PRACTICES WEEKLY, AND WITHIN 24 HOURS FOLLOWING A RAINFALL OF 0.5 INCHES OR GREATER. WRITTEN DOCUMENTATION OF EACH INSPECTION SHALL BE KEPT AT THE CONSTRUCTION SITE AND SHALL INCLUDE THE FOLLOWING INFORMATION: DATE, TIME, AND LOCATION OF INSPECTION; NAME OF INDIVIDUAL WHO PERFORMED THE INSPECTION; AN ASSESSMENT OF THE CONDITION OF BEST MANAGEMENT PRACTICES; A DESCRIPTION OF ANY BEST MANAGEMENT PRACTICE IMPLEMENTATION AND MAINTENANCE PERFORMED; AND A DESCRIPTION OF THE PRESENT PHASE OF CONSTRUCTION. THE CONTRACTOR IS RESPONSIBLE FOR MAINTAINING, REPAIRING, OR REPLACING BEST MANAGEMENT PRACTICES AS NECESSARY WITHIN 24 HOURS OF AN INSPECTION OR NOTIFICATION. THE CONTRACTOR IS RESPONSIBLE FOR INSPECTING, MAINTAINING, REPAIRING, OR REPLACING BEST MANAGEMENT PRACTICES UNTIL ALL LAND DISTURBING CONSTRUCTION ACTIVITY IS COMPLETED AND A UNIFORM PERENNIAL VEGETATIVE COVER IS ESTABLISHED WITH A DENSITY OF AT LEAST 70%.

THE CONTRACTOR IS RESPONSIBLE FOR POSTING THE PERMIT IN A CONSPICUOUS LOCATION ON THE CONSTRUCTION SITE. THE CONTRACTOR IS RESPONSIBLE FOR KEEPING A COPY OF THE APPROVED REPORTS, PLANS, AMENDMENTS, INSPECTION REPORTS, AND PERMITS AT THE CONSTRUCTION SITE AT ALL TIMES UNTIL ALL LAND DISTURBING CONSTRUCTION ACTIVITY IS COMPLETED AND A UNIFORM PERENNIAL VEGETATIVE COVER IS ESTABLISHED WITH A DENSITY OF AT LEAST 70%. THE CONTRACTOR IS RESPONSIBLE FOR NOTIFYING THE OWNER WHEN THE VEGETATIVE DENSITY REACHES AT LEAST 70%. THE OWNER IS RESPONSIBLE FOR TERMINATING DNR PERMIT COVERAGE.

AMENDMENTS:

THE CONTRACTOR IS RESPONSIBLE FOR AMENDING THE EROSION & SEDIMENT CONTROL PLAN IF: THERE IS A CHANGE IN CONSTRUCTION, OPERATION OR MAINTENANCE AT THE SITE WHICH HAS THE REASONABLE POTENTIAL FOR THE DISCHARGE OF POLLUTANTS; THE ACTIONS REQUIRED BY THE PLAN FAIL TO REDUCE THE IMPACTS OF POLLUTANTS CARRIED BY CONSTRUCTION SITE RUNOFF; OR IF THE DNR NOTIFIES THE APPLICANT OF CHANGES NEEDED IN THE PLAN. THE DNR AND OWNER SHALL BE NOTIFIED 5 WORKING DAYS PRIOR TO MAKING CHANGES TO THE PLAN.

NOTES:
1. NO STOCKPILES OF GRADING MATERIAL OR TOPSOIL SHALL BE PRESENT ON-SITE. MATERIALS TRUCKED IN SHALL BE INCORPORATED INTO THE WORK WITHOUT LONG TERM (7 DAYS) STORAGE.
2. ALL SEEDED LAWN AREAS SHALL BE COVERED WITH NON-CHANNEL EROSION MAT UNTIL TURF IS ESTABLISHED, OR SODDED

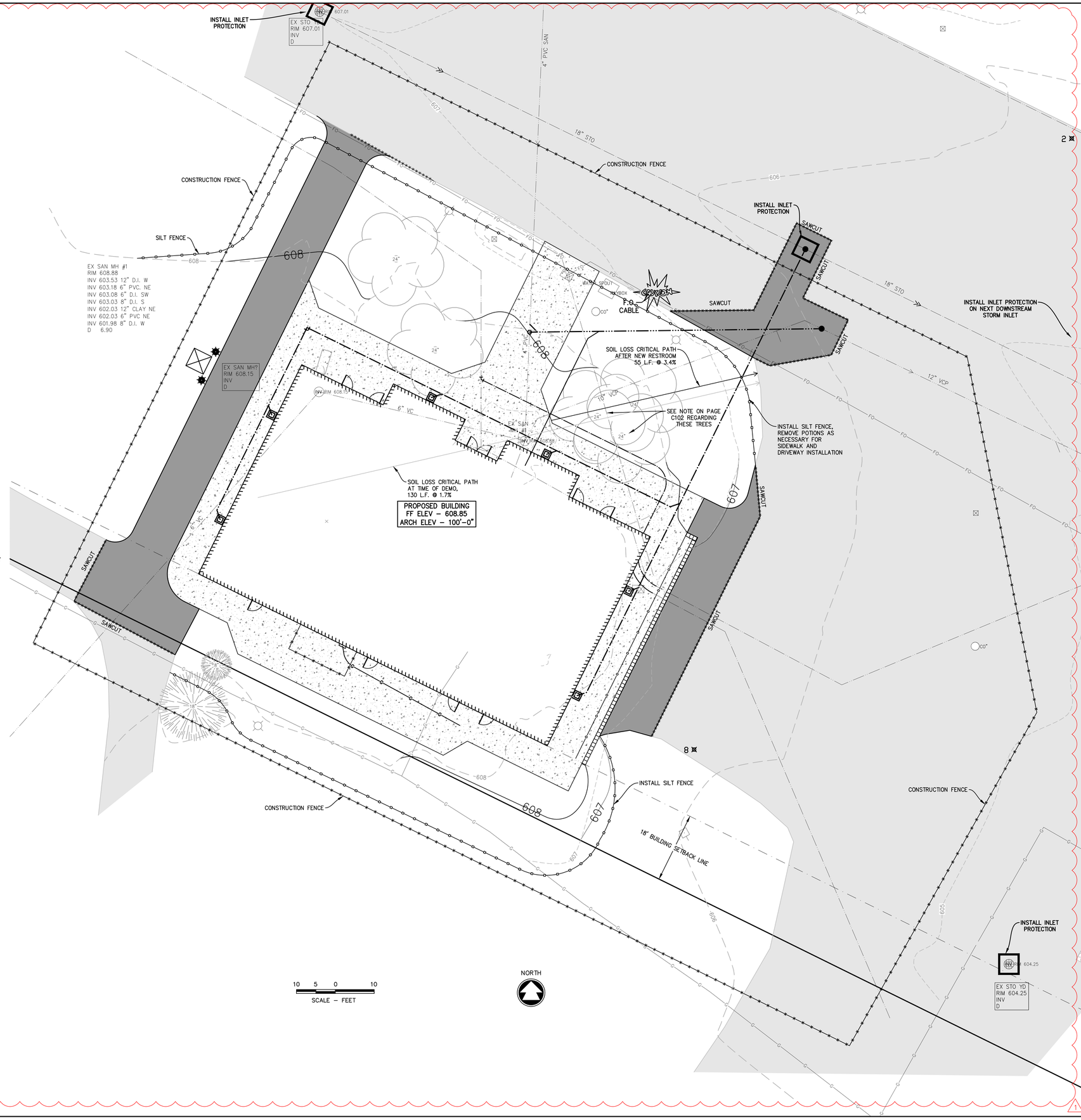

McMAHON ENGINEERS ARCHITECTS
McMAHON ASSOCIATES, INC.
1445 GARDNER STREET, GREEN BAY, WI 54246
Mailing: P.O.BOX 1025 NEENAH, WI 54957-1025
PH 920.751.4200 FX 920.751.4284 MCMGRP.COM

McMAHON provides this drawing and data, regardless of form, as instruments of service. All rights including copyrights are retained by McMAHON. The client and/or recipient agrees to the fullest extent permitted by law to indemnify and hold McMAHON harmless for any reuse of or changes made to the original drawing or data without prior written consent by McMAHON.

NO.	DATE	REVISION

NO.	DATE	REVISION
1	10/19/20	NEW SHEET

BROWN COUNTY FAIR GROUNDS: RESTROOM FACILITY AND DUMP STATION
BROWN COUNTY 1500 FT HOWARD AVE, DE PERE, WI 54115
PROPOSED EROSION CONTROL PLAN RESTROOM

DESIGNED –
DRAWN –
PROJECT NO. B0633 6-20-00119
DATE JULY 15, 2020
SHEET NO. C105

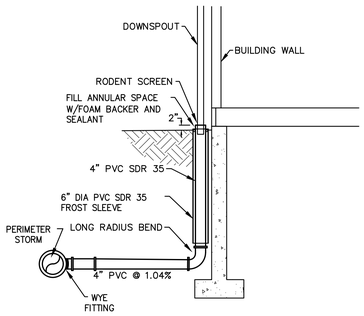

DOWNSPOUT CONNECTION

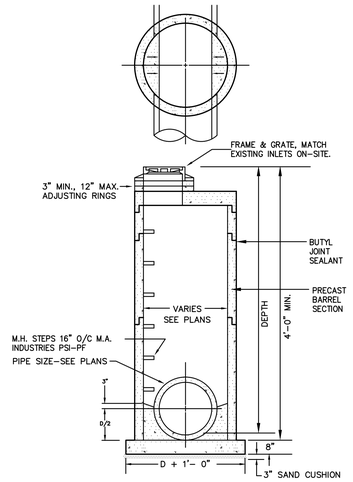

STORM SEWER INLET M.H. DETAIL

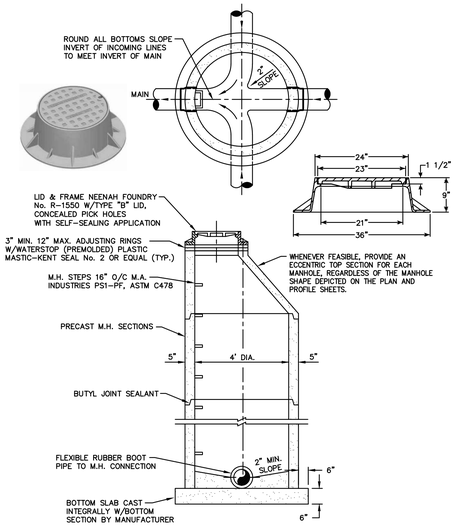

STANDARD PRECAST SANITARY MANHOLE

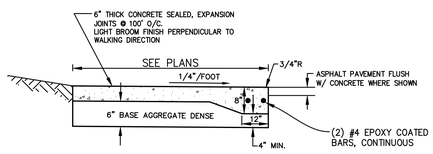

THICKENED EDGE CONCRETE SIDEWALK

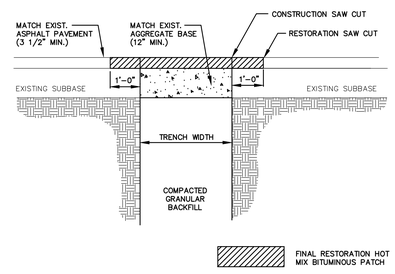

BITUMINOUS PAVEMENT RESTORATION
(DUNNING DRIVE)

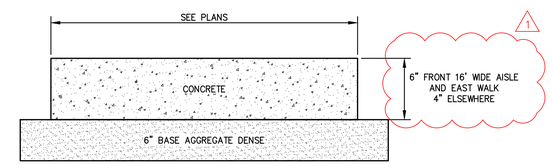

STANDARD CONCRETE SIDEWALK

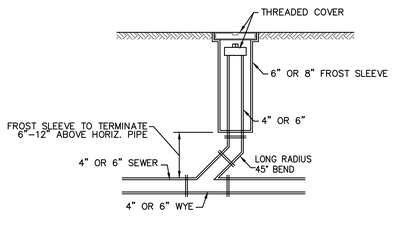

FROST SLEEVE FOR SEWER CLEANOUT

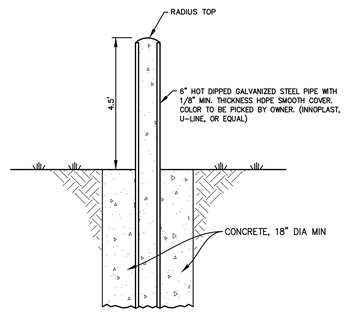

BOLLARD DETAIL

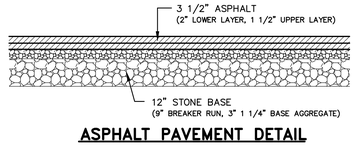

ASPHALT PAVEMENT DETAIL

McMAHON
ENGINEERS ARCHITECTS
McMAHON ASSOCIATES, INC.
1445 McMAHON DRIVE NEENAH, WI 54956
Mailing: P.O.BOX 1025 NEENAH, WI 54957-1025
PH 920.751.4200 FX 920.751.4284 MCMGRP.COM

McMahon Associates, Inc. provides this drawing & data, regardless of form, on instruments of service. All rights including copyrights are retained by McMahon Associates, Inc. The client is granted a non-exclusive license to use the instrument of service for the purpose of constructing, occupying or maintaining a project. Reuse of or changes made to the instrument of service without prior written consent by McMahon Associates, Inc.

NO.	DATE	REVISION

NO.	DATE	REVISION
1	10/19/20	RENUMBERED SHEET & DETAIL MODIFICATION

BROWN COUNTY FAIR GROUNDS: RESTROOM FACILITY AND DUMP STATION
BROWN COUNTY 1500 FT HOWARD AVE, DE PERE, WI 54115
MISCELLANEOUS RESTROOM DETAILS

DESIGNED	DRAWN
RJW	MJA

PROJECT NO. B0633 6-20-00119
DATE JULY 15, 2020
SHEET NO. C106

W:\PROJECTS\B0633\62000119\CADD\Civil3D\Plan Sheets\Title-Notes-Details.dwg, c106 miscellaneous restroom details, Plot Date: 10/19/2020 12:06 PM, xrefs: (meter piping detail, x-prop shade brown county fairgrounds, x-exist shade brown county fairgrounds, x-exist topo brown county fairgrounds, x-prop info brown county fairgrounds, brown county fairgrounds bndry comps dew, mcm conv field data_062320)
rschmechel, W:\PROJECTS\B0633\62000119\CADD\Civil3D\Plan Sheets\Title-Notes-Details.dwg, C106 Miscellaneous Restroom Details, 10/19/2020 12:06:09 PM, RSchmechel, 1:1

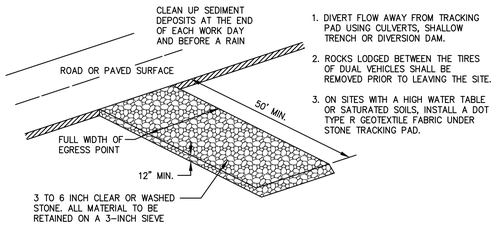

1. DIVERT FLOW AWAY FROM TRACKING PAD USING CULVERTS, SHALLOW TRENCH OR DIVERSION DAM.
2. ROCKS LODGED BETWEEN THE TIRES OF DUAL VEHICLES SHALL BE REMOVED PRIOR TO LEAVING THE SITE.
3. ON SITES WITH A HIGH WATER TABLE OR SATURATED SOILS, INSTALL A DOT TYPE R GEOTEXTILE FABRIC UNDER STONE TRACKING PAD.

TRACKING PAD DETAIL

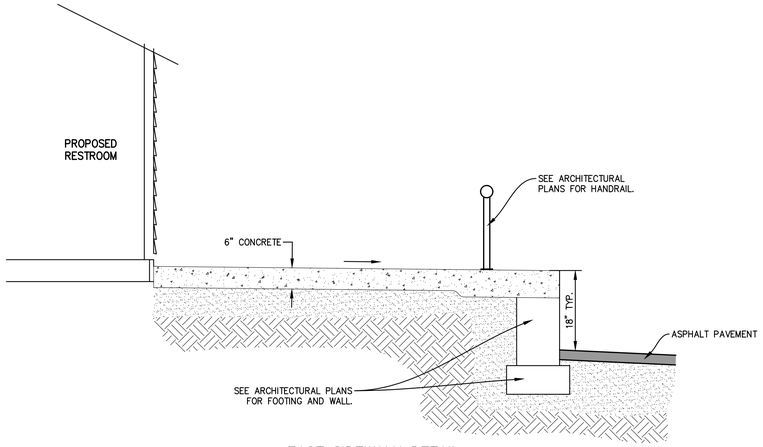

EAST SIDEWALK DETAIL

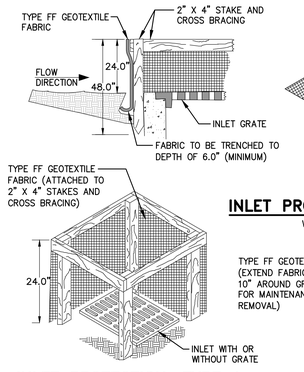

INLET PROTECTION, TYPE A

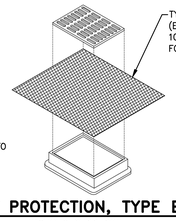

INLET PROTECTION, TYPE B

WITHOUT CURB BOX

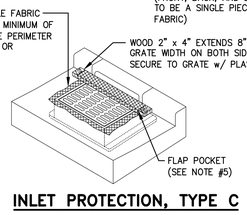

INLET PROTECTION, TYPE C

WITH CURB BOX

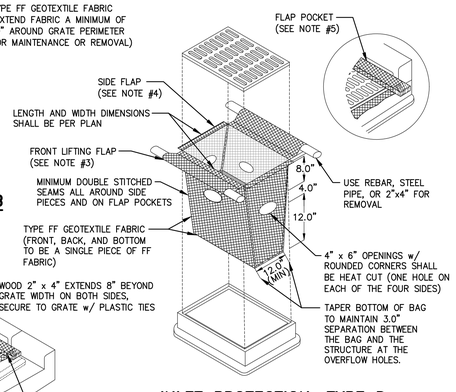

INLET PROTECTION, TYPE D

CAN BE INSTALLED IN INLETS WITH OR WITHOUT CURB BOXES

This drawing based on Wisconsin Department of Natural Resources Technical Standard No. 1060. Revision Date: 08/2014

GENERAL NOTES

1. TAPER BOTTOM OF BAG TO MAINTAIN THREE INCHES OF CLEARANCE BETWEEN THE BAG AND THE STRUCTURE, MEASURED FROM THE BOTTOM OF THE OVERFLOW OPENINGS TO THE STRUCTURE WALL.
2. GEOTEXTILE FABRIC TYPE FF FOR FLAPS, TOP AND BOTTOM OF OUTSIDE OF FILTER BAG. FRONT, BACK, AND BOTTOM OF FILTER BAG BEING ONE PIECE.
3. FRONT LIFTING FLAP IS TO BE USED WHEN REMOVING AND MAINTAINING FILTER BAG.
4. SIDE FLAPS SHALL BE A MAXIMUM OF TWO INCHES LONG. FOLD THE FABRIC OVER AND REINFORCE WITH MULTIPLE STITCHES.
5. FLAP POCKETS SHALL BE LARGE ENOUGH TO ACCEPT WOOD 2" x 4". THE REBAR, STEEL PIPE, OR WOOD SHALL BE INSTALLED IN THE REAR FLAP AND SHALL NOT BLOCK THE TOP HALF OF THE CURB FACE OPENING.

MAINTENANCE NOTES

1. WHEN REMOVING OR MAINTAINING INLET PROTECTION, CARE SHALL BE TAKEN SO THAT THE SEDIMENT TRAPPED IN THE FABRIC DOES NOT FALL INTO THE STRUCTURE. MATERIAL THAT HAS FALLEN INTO THE INLET SHALL BE IMMEDIATELY REMOVED.

STORM DRAIN INLET PROTECTION

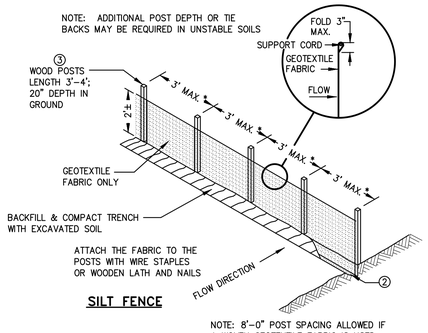

SILT FENCE

NOTE: 8'-0" POST SPACING ALLOWED IF A WOVEN GEOTEXTILE FABRIC IS USED.

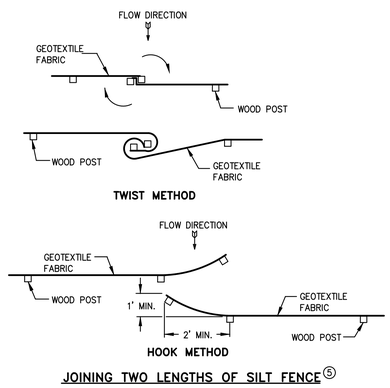

JOINING TWO LENGTHS OF SILT FENCE ⑤

This drawing based on Wisconsin Department of Transportation Standard Detail Drawing 8 E 9-6.

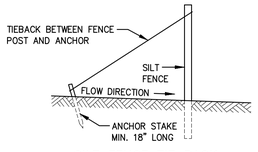

SILT FENCE TIE BACK

(WHEN ADDITIONAL SUPPORT REQUIRED)

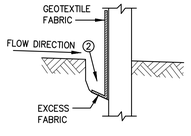

TRENCH DETAIL

SILT FENCE DETAIL

GENERAL NOTES

① HORIZONTAL BRACE REQUIRED WITH 2" X 4" WOODEN FRAME OR EQUIVALENT AT TOP OF POSTS.

② TRENCH SHALL BE A MINIMUM OF 4" WIDE & 6" DEEP TO BURY AND ANCHOR THE GEOTEXTILE FABRIC. FOLD MATERIAL TO FIT TRENCH AND BACKFILL & COMPACT TRENCH WITH EXCAVATED SOIL.

③ WOOD POSTS SHALL BE A MINIMUM SIZE OF 1 1/8" X 1 1/8" OF OAK OR HICKORY

④ SILT FENCE TO EXTEND ACROSS THE TOP OF THE PIPE.

⑤ CONSTRUCT SILT FENCE FROM A CONTINUOUS ROLL IF POSSIBLE BY CUTTING LENGTHS TO AVOID JOINTS. IF A JOINT IS NECESSARY USE ONE OF THE FOLLOWING TWO METHODS; A) OVERLAP THE END POSTS AND TWIST, OR ROTATE, AT LEAST 180 DEGREES, B) HOOK THE END OF EACH SILT FENCE LENGTH.

McMAHON ENGINEERS ARCHITECTS
McMAHON ASSOCIATES, INC.
1445 McMAHON DRIVE NEENAH, WI 54956
Mailing: P.O.BOX 1025 NEENAH, WI 54957-1025
PH 920.751.4200 FX 920.751.4284 MCMGRP.COM

McMahon Associates, Inc. provides this drawing & data, regardless of form, as instruments of service. All rights including copyrights are retained by McMahon Associates, Inc. The client is granted a non-exclusive license to use the instrument of service for the purpose of constructing, occupying or maintaining a project. Reuse or changes made to the instrument of service without prior written consent by McMahon Associates, Inc.

NO.	DATE	REVISION
1	10/19/20	RENUMBERED SHEET

NO.	DATE	REVISION

BROWN COUNTY FAIR GROUNDS: RESTROOM FACILITY AND DUMP STATION
BROWN COUNTY 1500 FT HOWARD AVE, DE PERE, WI 54115
MISCELLANEOUS RESTROOM SITEWORK DETAILS

DESIGNED	DRAWN
RJW	MJA

PROJECT NO. B0633 6-20-00119

DATE JULY 15, 2020

SHEET NO. C107

rachmechel, W:\PROJECTS\B0633\62000119\CADD\Civil3D\Plan Sheets\Title-Notes-Details.dwg, C107 Miscellaneous Restroom Sitework Details, 10/19/2020 12:06:10 PM, RSchmechel, 1:1
x-exist topo brown county fairgrounds, x-prop info brown county fairgrounds, brown county fairgrounds bndry comps dwg, mcm comp field data_062320)
x-exist shade brown county fairgrounds, x-prop shade brown county fairgrounds, x-exist shade brown county fairgrounds, (meter piping detail,

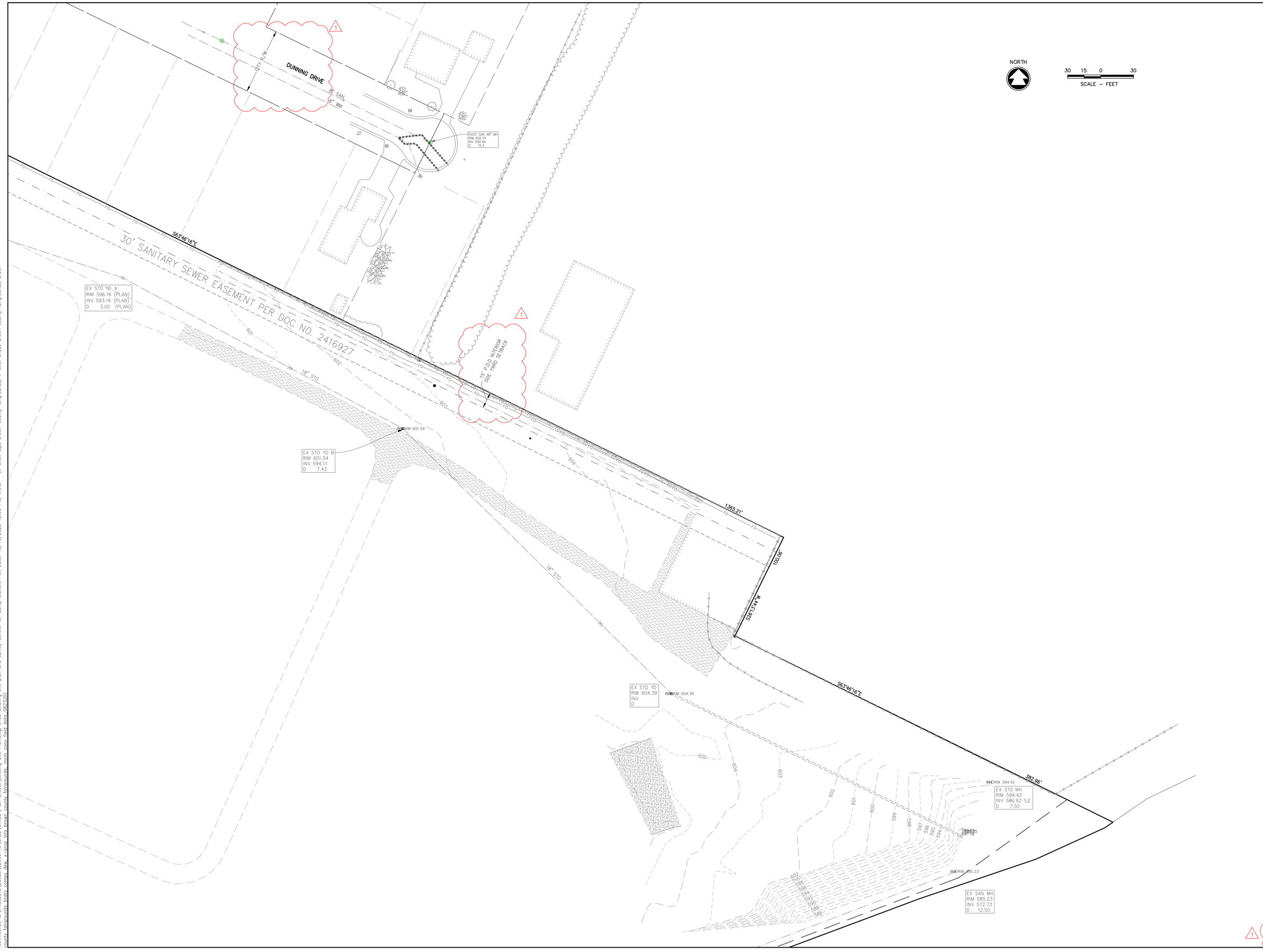

rschmechel W:\PROJECTS\B0633\62000119\CADD\Civil3D\Plan Sheets\Existing Site Plan.dwg, c108 existing site plan and survey control for dump station, Plot Date: 10/19/2020 12:06 PM, xrefs: (x-exist topo brown county fairgrounds, x-exist shade brown county fairgrounds, brown county fairgrounds bndry comps xfmk, x-prop info brown county fairgrounds, mcm conv field data 062320)

W:\PROJECTS\B0633\62000119\CADD\Civil3D\Plan Sheets\Existing Site Plan.dwg, C108 Existing Site Plan and Survey Control for Dump Station, 10/19/2020 12:06:16 PM, RSchmechel, 1:1

McMAHON
ENGINEERS ARCHITECTS
McMAHON ASSOCIATES, INC.
1445 McMAHON DRIVE NEENAH, WI 54956
Mailing: P.O.BOX 1025 NEENAH, WI 54957-1025
PH 920.751.4200 FX 920.751.4284 MCMGRP.COM

McMAHON provides this drawing and data, regardless of form, as instruments of service. All rights including copyrights are retained by McMAHON. The client and/or recipient agrees to the fullest extent permitted by law to indemnify and hold McMAHON harmless for any reuse of or changes made to the original drawing or data without prior written consent by McMAHON.

NO.	DATE	REVISION
1	10/19/20	RENUMBERED SHEET, ADDED NOTES/LABELS)

NO.	DATE	REVISION

BROWN COUNTY FAIR GROUNDS: RESTROOM FACILITY AND DUMP STATION
BROWN COUNTY 1500 FT HOWARD AVE, DE PERE, WI 54115
EXISTING SITE PLAN AND SURVEY CONTROL FOR DUMP STATION

DESIGNED	DRAWN
RJW	MJA

PROJECT NO.
B0633 6-20-00119

DATE
JULY 15, 2020

SHEET NO.
C108

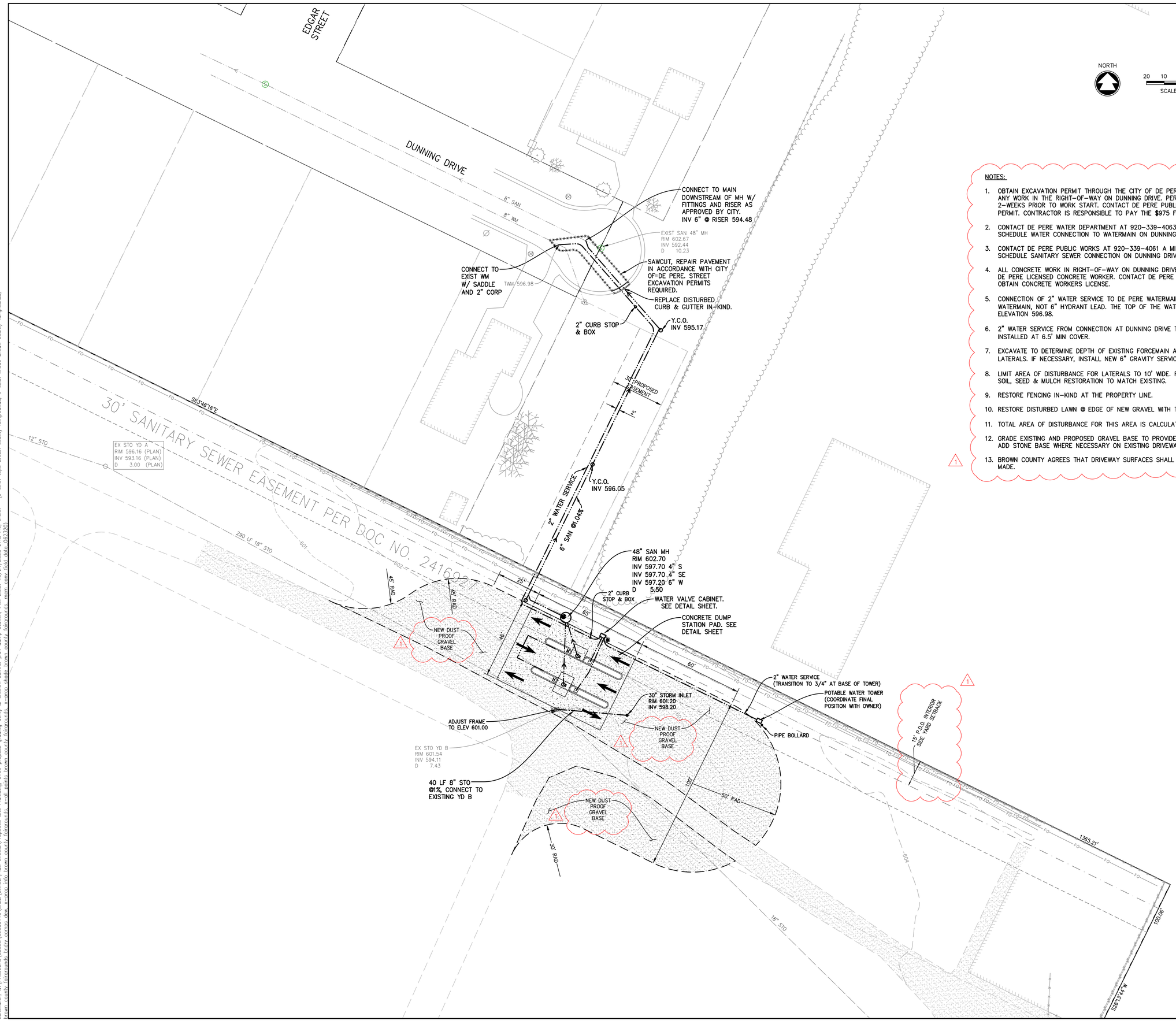

NOTES:

1. OBTAIN EXCAVATION PERMIT THROUGH THE CITY OF DE PERE PUBLIC WORKS DEPARTMENT PRIOR TO ANY WORK IN THE RIGHT-OF-WAY ON DUNNING DRIVE. PERMIT SHALL BE SUBMITTED A MINIMUM OF 2-WEEKS PRIOR TO WORK START. CONTACT DE PERE PUBLIC WORKS AT 920-339-4061 TO OBTAIN PERMIT. CONTRACTOR IS RESPONSIBLE TO PAY THE $975 FEE.
2. CONTACT DE PERE WATER DEPARTMENT AT 920-339-4063 A MINIMUM OF ONE WEEK IN ADVANCE TO SCHEDULE WATER CONNECTION TO WATERMAIN ON DUNNING DRIVE.
3. CONTACT DE PERE PUBLIC WORKS AT 920-339-4061 A MINIMUM OF ONE WEEK IN ADVANCE TO SCHEDULE SANITARY SEWER CONNECTION ON DUNNING DRIVE.
4. ALL CONCRETE WORK IN RIGHT-OF-WAY ON DUNNING DRIVE MUST BE COMPLETED BY A CITY OF DE PERE LICENSED CONCRETE WORKER. CONTACT DE PERE PUBLIC WORKS AT 920-339-4061 TO OBTAIN CONCRETE WORKERS LICENSE.
5. CONNECTION OF 2" WATER SERVICE TO DE PERE WATERMAIN IN DUNNING DRIVE MUST BE TO 8" WATERMAIN, NOT 6" HYDRANT LEAD. THE TOP OF THE WATERMAIN AT THE CUL-DE-SAC IS LISTED AT ELEVATION 596.98.
6. 2" WATER SERVICE FROM CONNECTION AT DUNNING DRIVE TO THE WATER VALVE CABINET SHALL BE INSTALLED AT 6.5' MIN COVER.
7. EXCAVATE TO DETERMINE DEPTH OF EXISTING FORCEMAIN AT THE CROSSING PRIOR TO INSTALLATION OF LATERALS. IF NECESSARY, INSTALL NEW 6" GRAVITY SERVICE DEEPER TO AVOID ELEVATION CONFLICT.
8. LIMIT AREA OF DISTURBANCE FOR LATERALS TO 10' WIDE. RESTORE TRENCH AREAS IN-KIND WITH TOP SOIL, SEED & MULCH RESTORATION TO MATCH EXISTING.
9. RESTORE FENCING IN-KIND AT THE PROPERTY LINE.
10. RESTORE DISTURBED LAWN @ EDGE OF NEW GRAVEL WITH TOPSOIL, SEED AND MULCH.
11. TOTAL AREA OF DISTURBANCE FOR THIS AREA IS CALCULATED AT 21,500 S.F. (0.5 ACRES).
12. GRADE EXISTING AND PROPOSED GRAVEL BASE TO PROVIDE UNIFORM DRAINAGE TO STORM STRUCTURES. ADD STONE BASE WHERE NECESSARY ON EXISTING DRIVEWAY.
13. BROWN COUNTY AGREES THAT DRIVEWAY SURFACES SHALL BE PAVED AS FUTURE IMPROVEMENTS ARE MADE.

McMAHON
ENGINEERS ARCHITECTS
McMAHON ASSOCIATES, INC.
1445 McMAHON DRIVE NEENAH, WI 54956
Mailing: P.O.BOX 1025 NEENAH, WI 54957-1025
PH 920.751.4200 FX 920.751.4284 MCMGRP.COM

McMAHON provides this drawing and data, regardless of form, as instruments of service. All rights including copyrights are retained by McMAHON. The client and/or recipient agrees to the fullest extent permitted by law to indemnify and hold McMAHON harmless for any reuse of or changes made to the original drawing or data without prior written consent by McMAHON.

NO.	DATE	REVISION

NO.	DATE	RENUMBERED SHEET	REVISION
1	10/19/20		

BROWN COUNTY FAIR GROUNDS: RESTROOM FACILITY AND DUMP STATION
BROWN COUNTY 1500 FT HOWARD AVE, DE PERE, WI 54115
PROPOSE GRADING UTILITY & EROSION CONTROL PLAN DUMP STATION

DESIGNED	DRAWN
RJW	MJA

PROJECT NO. B0633 6-20-00119

DATE JULY 15, 2020

SHEET NO. C109

kchevalier, W:\PROJECTS\B0633\62000119\CADD\Civil3D\Plan Sheets\Proposed Site Plan.dwg, c109 propose grading utility & erosion control plan dump station, Plot Date: 10/21/2020 2:48 PM, xrefs: brown county fairgrounds bndry compo dew, x-crop info brown county fairgrounds, x-all points brown county fairgrounds, x-crop shade brown county fairgrounds, mcm conv field data (062320), x-exist topo brown county fairgrounds, x-exist shade brown county fairgrounds,

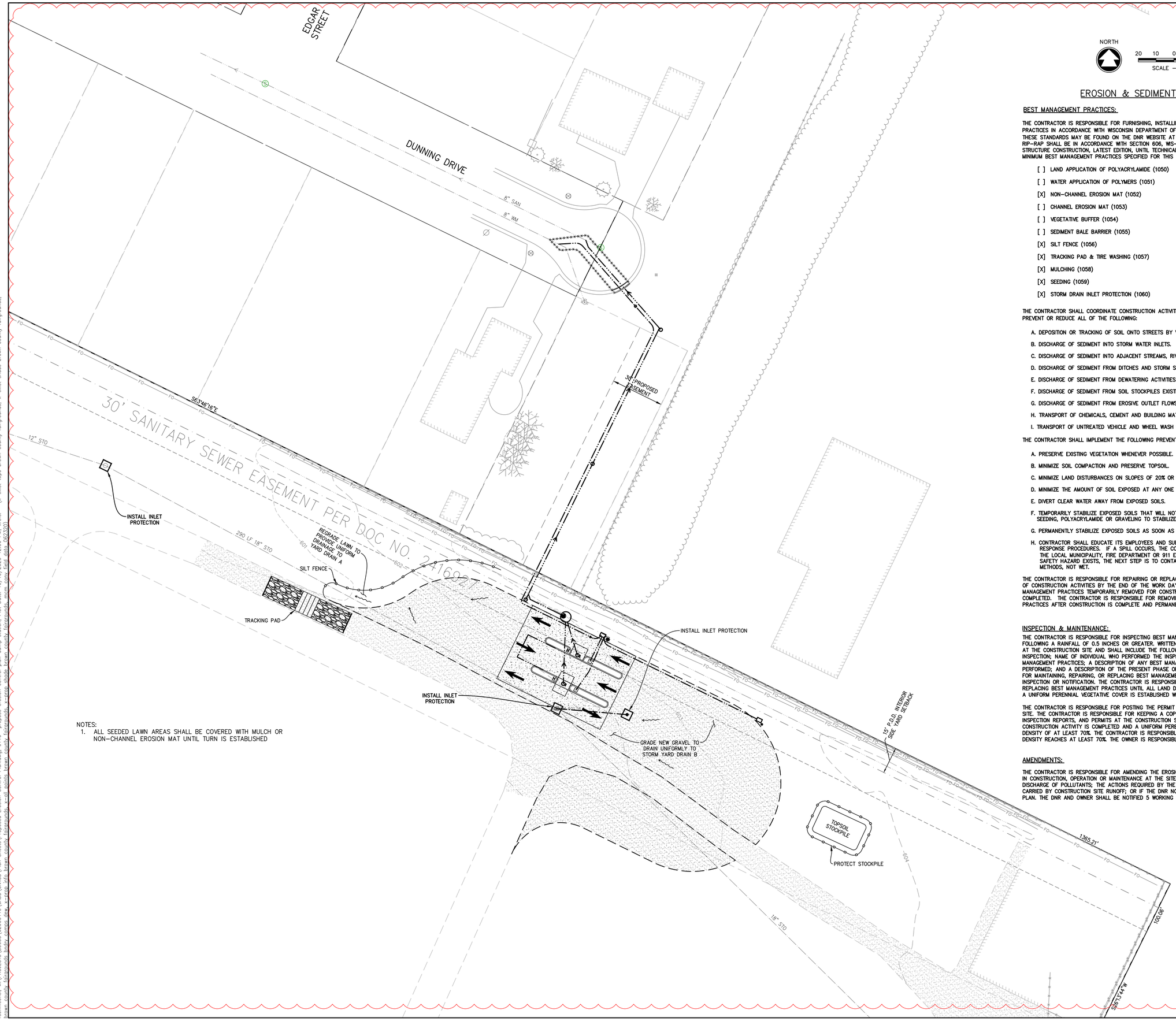

NOTES:
1. ALL SEEDED LAWN AREAS SHALL BE COVERED WITH MULCH OR NON-CHANNEL EROSION MAT UNTIL TURN IS ESTABLISHED

EROSION & SEDIMENT CONTROL PLAN

BEST MANAGEMENT PRACTICES:

THE CONTRACTOR IS RESPONSIBLE FOR FURNISHING, INSTALLING, MAINTAINING AND REMOVING BEST MANAGEMENT PRACTICES IN ACCORDANCE WITH WISCONSIN DEPARTMENT OF NATURAL RESOURCES (DNR) TECHNICAL STANDARDS. THESE STANDARDS MAY BE FOUND ON THE DNR WEBSITE AT http://www.dnr.wi.gov/runoff/stormwater/techstds.htm. RIP-RAP SHALL BE IN ACCORDANCE WITH SECTION 606, WIS-DOT STANDARD SPECIFICATIONS FOR HIGHWAY AND STRUCTURE CONSTRUCTION, LATEST EDITION, UNTIL TECHNICAL STANDARD 1065 IS COMPLETED BY THE DNR. THE MINIMUM BEST MANAGEMENT PRACTICES SPECIFIED FOR THIS PROJECT ARE AS FOLLOWS:

- [ ] LAND APPLICATION OF POLYACRYLAMIDE (1050)
- [ ] WATER APPLICATION OF POLYMERS (1051)
- [X] NON-CHANNEL EROSION MAT (1052)
- [ ] CHANNEL EROSION MAT (1053)
- [ ] VEGETATIVE BUFFER (1054)
- [ ] SEDIMENT BALE BARRIER (1055)
- [X] SILT FENCE (1056)
- [X] TRACKING PAD & TIRE WASHING (1057)
- [X] MULCHING (1058)
- [X] SEEDING (1059)
- [X] STORM DRAIN INLET PROTECTION (1060)
- [ ] DE-WATERING (1061)
- [ ] DITCH CHECK (1062)
- [ ] SEDIMENT TRAP (1063)
- [ ] SEDIMENT BASIN (1064)
- [ ] RIP-RAP (1065)
- [ ] CONSTRUCTION DIVERSION (1066)
- [X] GRADING PRACTICES (1067)
- [X] DUST CONTROL (1068)
- [ ] TURBIDITY BARRIER (1069)
- [ ] SILT CURTAIN (1070)
- [ ] MANUFACTURED PERIMETER PRODUCTS (1071)

THE CONTRACTOR SHALL COORDINATE CONSTRUCTION ACTIVITIES AND IMPLEMENT BEST MANAGEMENT PRACTICES TO PREVENT OR REDUCE ALL OF THE FOLLOWING:

A. DEPOSITION OR TRACKING OF SOIL ONTO STREETS BY VEHICLES.
B. DISCHARGE OF SEDIMENT INTO STORM WATER INLETS.
C. DISCHARGE OF SEDIMENT INTO ADJACENT STREAMS, RIVERS, LAKES AND WETLANDS.
D. DISCHARGE OF SEDIMENT FROM DITCHES AND STORM SEWERS THAT FLOW OFFSITE.
E. DISCHARGE OF SEDIMENT FROM DEWATERING ACTIVITIES.
F. DISCHARGE OF SEDIMENT FROM SOIL STOCKPILES EXISTING FOR 7 DAYS OR MORE.
G. DISCHARGE OF SEDIMENT FROM EROSIVE OUTLET FLOWS.
H. TRANSPORT OF CHEMICALS, CEMENT AND BUILDING MATERIALS BY RUNOFF.
I. TRANSPORT OF UNTREATED VEHICLE AND WHEEL WASH WATER BY RUNOFF.

THE CONTRACTOR SHALL IMPLEMENT THE FOLLOWING PREVENTATIVE MEASURES:

A. PRESERVE EXISTING VEGETATION WHENEVER POSSIBLE.
B. MINIMIZE SOIL COMPACTION AND PRESERVE TOPSOIL.
C. MINIMIZE LAND DISTURBANCES ON SLOPES OF 20% OR MORE.
D. MINIMIZE THE AMOUNT OF SOIL EXPOSED AT ANY ONE TIME.
E. DIVERT CLEAR WATER AWAY FROM EXPOSED SOILS.
F. TEMPORARILY STABILIZE EXPOSED SOILS THAT WILL NOT BE ACTIVE FOR 14 DAYS OR MORE. USE MULCHING, SEEDING, POLYACRYLAMIDE OR GRAVELING TO STABILIZE.
G. PERMANENTLY STABILIZE EXPOSED SOILS AS SOON AS POSSIBLE.
H. CONTRACTOR SHALL EDUCATE ITS EMPLOYEES AND SUBCONTRACTORS ABOUT PROPER SPILL PREVENTION AND RESPONSE PROCEDURES. IF A SPILL OCCURS, THE CONTRACTOR SHALL EVACUATE THE AREA AND IMMEDIATELY NOTIFY THE LOCAL MUNICIPALITY, FIRE DEPARTMENT OR 911 EMERGENCY SYSTEM. IF NO FIRE, EXPLOSION OR LIFE / HEALTH SAFETY HAZARD EXISTS, THE NEXT STEP IS TO CONTAIN THE SPILL AND PERFORM CLEANUP. USE DRY CLEANUP METHODS, NOT WET.

THE CONTRACTOR IS RESPONSIBLE FOR REPAIRING OR REPLACING BEST MANAGEMENT PRACTICES DESTROYED AS A RESULT OF CONSTRUCTION ACTIVITIES BY THE END OF THE WORK DAY. THE CONTRACTOR IS RESPONSIBLE FOR REPLACING BEST MANAGEMENT PRACTICES TEMPORARILY REMOVED FOR CONSTRUCTION ACTIVITY AS SOON AS THOSE ACTIVITIES ARE COMPLETED. THE CONTRACTOR IS RESPONSIBLE FOR REMOVING AND DISPOSING OF TEMPORARY BEST MANAGEMENT PRACTICES AFTER CONSTRUCTION IS COMPLETE AND PERMANENT VEGETATION IS ESTABLISHED.

INSPECTION & MAINTENANCE:

THE CONTRACTOR IS RESPONSIBLE FOR INSPECTING BEST MANAGEMENT PRACTICES WEEKLY, AND WITHIN 24 HOURS FOLLOWING A RAINFALL OF 0.5 INCHES OR GREATER. WRITTEN DOCUMENTATION OF EACH INSPECTION SHALL BE KEPT AT THE CONSTRUCTION SITE AND SHALL INCLUDE THE FOLLOWING INFORMATION: DATE, TIME, AND LOCATION OF INSPECTION; NAME OF INDIVIDUAL WHO PERFORMED THE INSPECTION; AN ASSESSMENT OF THE CONDITION OF BEST MANAGEMENT PRACTICES; A DESCRIPTION OF ANY BEST MANAGEMENT PRACTICE IMPLEMENTATION AND MAINTENANCE PERFORMED; AND A DESCRIPTION OF THE PRESENT PHASE OF CONSTRUCTION. THE CONTRACTOR IS RESPONSIBLE FOR MAINTAINING, REPAIRING, OR REPLACING BEST MANAGEMENT PRACTICES AS NECESSARY WITHIN 24 HOURS OF AN INSPECTION OR NOTIFICATION. THE CONTRACTOR IS RESPONSIBLE FOR INSPECTING, MAINTAINING, REPAIRING, OR REPLACING BEST MANAGEMENT PRACTICES UNTIL ALL LAND DISTURBING CONSTRUCTION ACTIVITY IS COMPLETED AND A UNIFORM PERENNIAL VEGETATIVE COVER IS ESTABLISHED WITH A DENSITY OF AT LEAST 70%.

THE CONTRACTOR IS RESPONSIBLE FOR POSTING THE PERMIT IN A CONSPICUOUS LOCATION ON THE CONSTRUCTION SITE. THE CONTRACTOR IS RESPONSIBLE FOR KEEPING A COPY OF THE APPROVED REPORTS, PLANS, AMENDMENTS, INSPECTION REPORTS, AND PERMITS AT THE CONSTRUCTION SITE AT ALL TIMES UNTIL ALL LAND DISTURBING CONSTRUCTION ACTIVITY IS COMPLETED AND A UNIFORM PERENNIAL VEGETATIVE COVER IS ESTABLISHED WITH A DENSITY OF AT LEAST 70%. THE CONTRACTOR IS RESPONSIBLE FOR NOTIFYING THE OWNER WHEN THE VEGETATIVE DENSITY REACHES AT LEAST 70%. THE OWNER IS RESPONSIBLE FOR TERMINATING DNR PERMIT COVERAGE.

AMENDMENTS:

THE CONTRACTOR IS RESPONSIBLE FOR AMENDING THE EROSION & SEDIMENT CONTROL PLAN IF: THERE IS A CHANGE IN CONSTRUCTION, OPERATION OR MAINTENANCE AT THE SITE WHICH HAS THE REASONABLE POTENTIAL FOR THE DISCHARGE OF POLLUTANTS; THE ACTIONS REQUIRED BY THE PLAN FAIL TO REDUCE THE IMPACTS OF POLLUTANTS CARRIED BY CONSTRUCTION SITE RUNOFF; OR IF THE DNR NOTIFIES THE APPLICANT OF CHANGES NEEDED IN THE PLAN. THE DNR AND OWNER SHALL BE NOTIFIED 5 WORKING DAYS PRIOR TO MAKING CHANGES TO THE PLAN.

McMAHON
ENGINEERS ARCHITECTS
McMAHON ASSOCIATES, INC.
1445 McMAHON DRIVE NEENAH, WI 54956
Mailing: P.O.BOX 1025 NEENAH, WI 54957-1025
PH 920.751.4200 FX 920.751.4284 MCMGRP.COM

McMAHON provides this drawing and data, regardless of form, as instruments of service. All rights including copyrights are retained by McMAHON. The client and/or recipient agrees to the fullest extent permitted by law to indemnify and hold McMAHON harmless for any reuse of or changes made to the original drawing or data without prior written consent by McMAHON.

NO.	DATE	REVISION

NO.	DATE	REVISION
1	10/19/20	NEW SHEET

BROWN COUNTY FAIR GROUNDS: RESTROOM FACILITY AND DUMP STATION
BROWN COUNTY 1500 FT HOWARD AVE, DE PERE, WI 54115
PROPOSE EROSION CONTROL PLAN DUMP STATION

DESIGNED	DRAWN
–	–

PROJECT NO. B0633 6-20-00119
DATE JULY 15, 2020
SHEET NO. C110

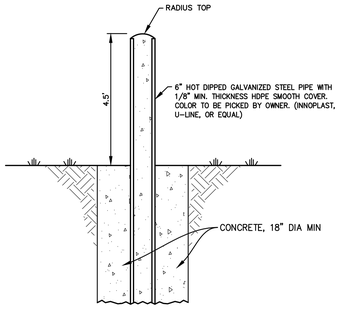

BOLLARD DETAIL

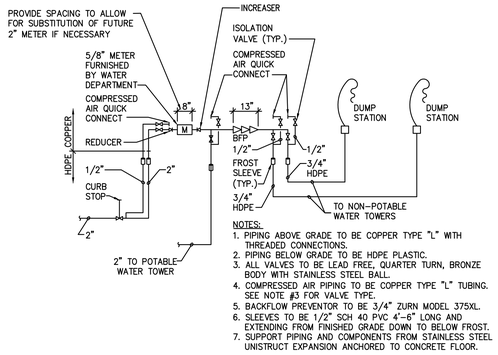

NOTES:
1. PIPING ABOVE GRADE TO BE COPPER TYPE "L" WITH THREADED CONNECTIONS.
2. PIPING BELOW GRADE TO BE HDPE PLASTIC.
3. ALL VALVES TO BE LEAD FREE, QUARTER TURN, BRONZE BODY WITH STAINLESS STEEL BALL.
4. COMPRESSED AIR PIPING TO BE COPPER TYPE "L" TUBING. SEE NOTE #3 FOR VALVE TYPE.
5. BACKFLOW PREVENTOR TO BE 3/4" ZURN MODEL 375XL.
6. SLEEVES TO BE 1/2" SCH 40 PVC 4'-6" LONG AND EXTENDING FROM FINISHED GRADE DOWN TO BELOW FROST.
7. SUPPORT PIPING AND COMPONENTS FROM STAINLESS STEEL UNISTRUCT EXPANSION ANCHORED TO CONCRETE FLOOR.

METER PIPING DETAIL
N.T.S.

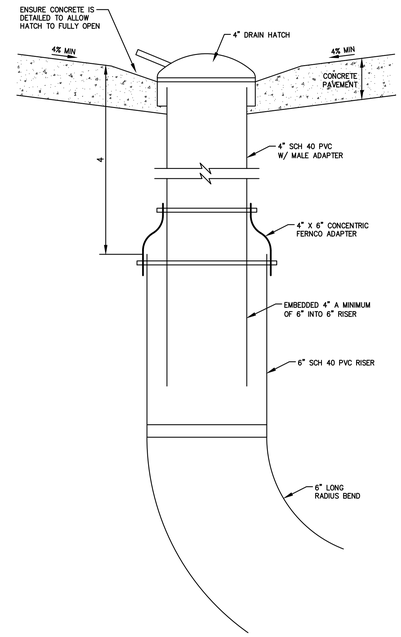

RECEPTOR DETAIL

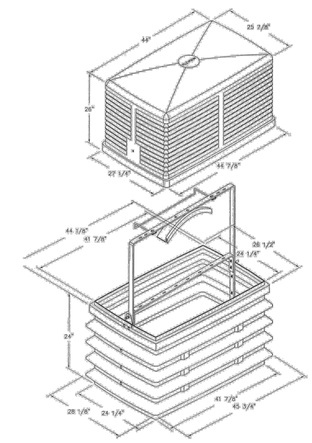

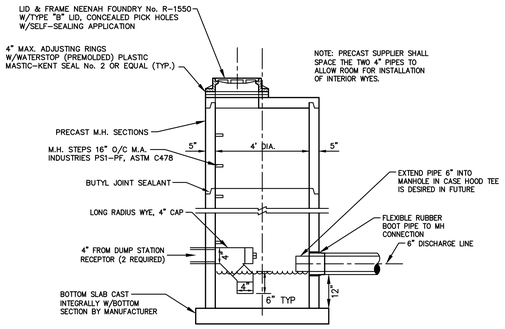

PRECAST TRAPPED SANITARY MANHOLE

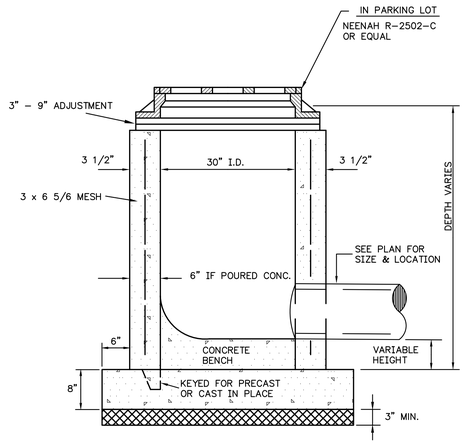

30" STORM INLET

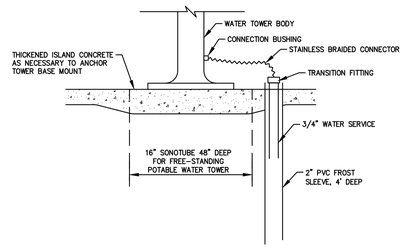

WATER TOWER DETAIL

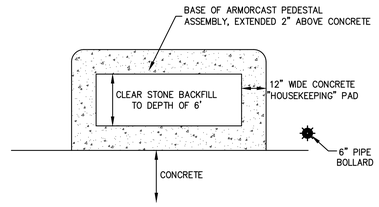

PEDESTAL PLAN VIEW

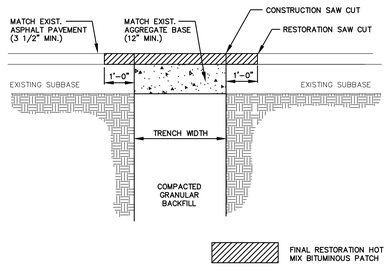

BITUMINOUS PAVEMENT RESTORATION
(DUNNING DRIVE)

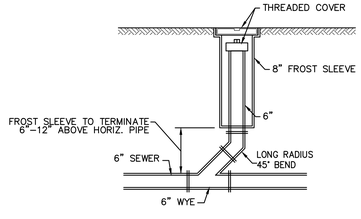

FROST SLEEVE FOR SEWER CLEANOUT

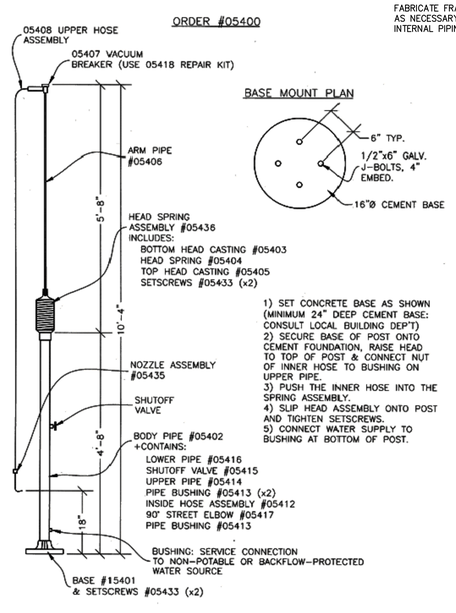

1) SET CONCRETE BASE AS SHOWN (MINIMUM 24" DEEP CEMENT BASE: CONSULT LOCAL BUILDING DEP'T)
2) SECURE BASE OF POST ONTO CEMENT FOUNDATION, RAISE HEAD TO TOP OF POST & CONNECT NUT OF INNER HOSE TO BUSHING ON UPPER PIPE.
3) PUSH THE INNER HOSE INTO THE SPRING ASSEMBLY.
4) SLIP HEAD ASSEMBLY ONTO POST AND TIGHTEN SETSCREWS.
5) CONNECT WATER SUPPLY TO BUSHING AT BOTTOM OF POST.

REMORT WATER TOWER

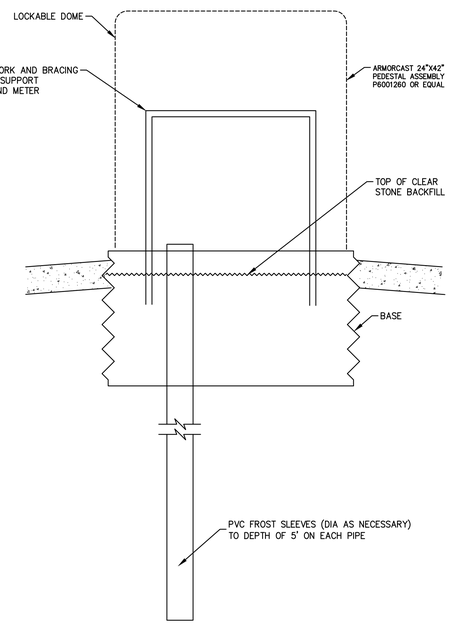

PEDESTAL PROFILE VIEW

McMAHON
ENGINEERS ARCHITECTS
McMAHON ASSOCIATES, INC.
1445 McMAHON DRIVE NEENAH, WI 54956
Mailing: P.O.BOX 1025 NEENAH, WI 54957-1025
PH 920.751.4200 FX 920.751.4284 MCMGRP.COM

McMahon Associates, Inc. provides this drawing & data, regardless of form, on instruments of service. All rights including copyrights are retained by McMahon Associates, Inc. The client and owner is granted the use of the instrument of service for the execution of a project by McMahon Associates, Inc. contingent upon the client and owner's payment in full of all charges made to the client and owner for services rendered. Any other use or reuse by others is prohibited without the express written consent of McMahon Associates, Inc.

NO.	DATE	REVISION

NO.	DATE	REVISION
1	10/19/20	RENUMBERED SHEET

BROWN COUNTY FAIR GROUNDS: RESTROOM FACILITY AND DUMP STATION
BROWN COUNTY 1500 FT HOWARD AVE, DE PERE, WI 54115
MISCELLANEOUS DUMP STATION DETAILS

DESIGNED	DRAWN
–	–

PROJECT NO. B0633 6-20-00119
DATE JULY 15, 2020
SHEET NO. C111

rschmechel, W:\PROJECTS\B0633\62000119\CADD\Civil3D\Plan Sheets\Title-Notes-Details.dwg, C111 Miscellaneous Dump Station Details, 10/19/2020 12:06:30 PM, R25mechel, 1:1
x-exist topo brown county fairgrounds, x-prop info brown county fairgrounds, brown county fairgrounds bndry comps dew, mcm conv field data_062320)
W:\PROJECTS\B0633\62000119\CADD\Civil3D\Plan Sheets\Title-Notes-Details.dwg, C111 Miscellaneous Dump Station Details, 10/19/2020 12:06:30 PM, R25mechel, 1:1

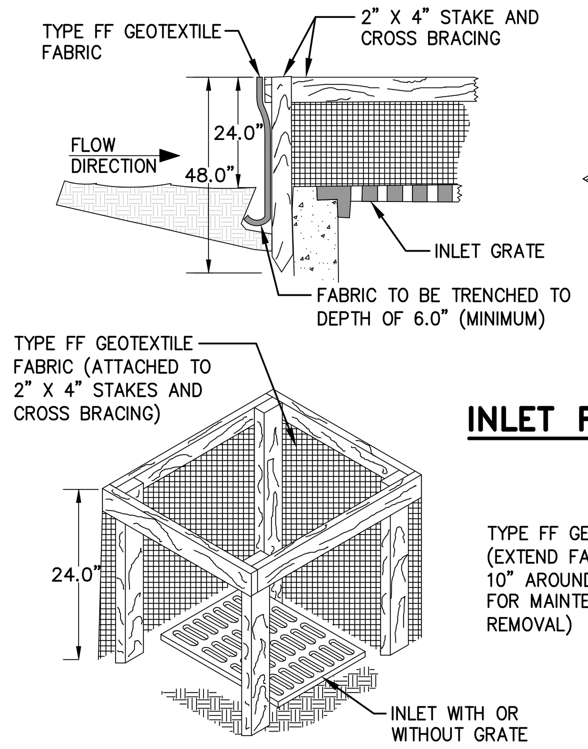

INLET PROTECTION, TYPE A

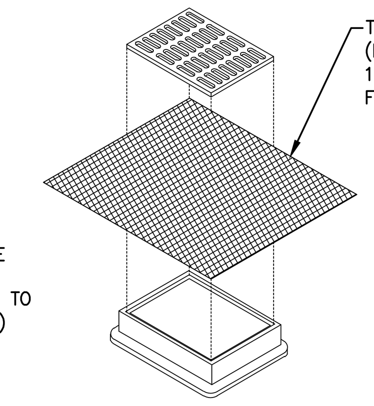

INLET PROTECTION, TYPE B

WITHOUT CURB BOX

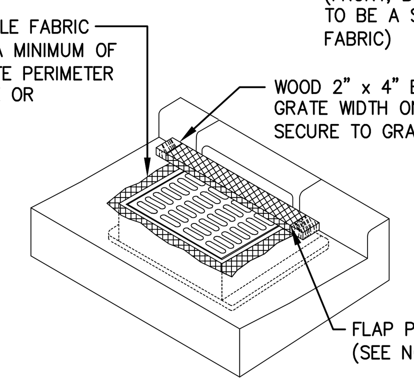

INLET PROTECTION, TYPE C

WITH CURB BOX

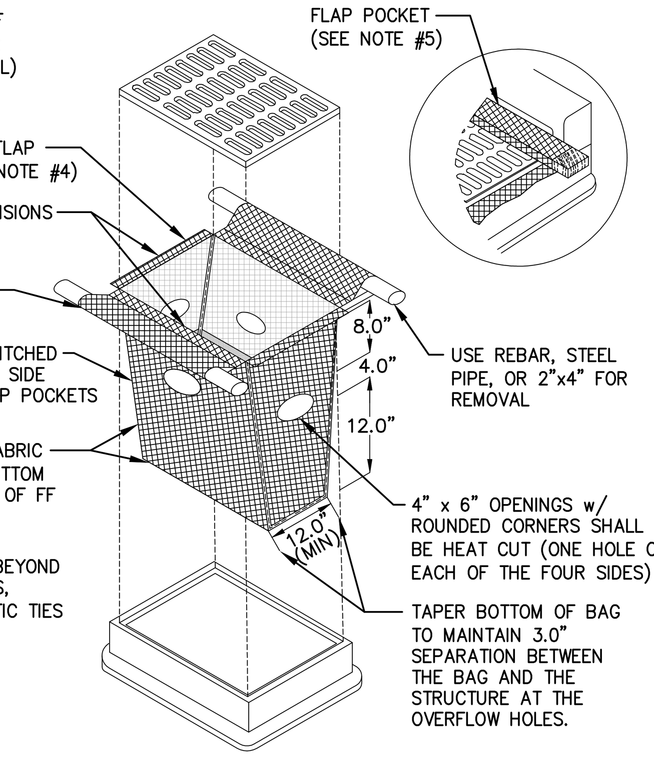

INLET PROTECTION, TYPE D

CAN BE INSTALLED IN INLETS WITH OR WITHOUT CURB BOXES

This drawing based on Wisconsin Department of Natural Resources Technical Standard No. 1060. Revision Date: 08/2014

GENERAL NOTES

1. TAPER BOTTOM OF BAG TO MAINTAIN THREE INCHES OF CLEARANCE BETWEEN THE BAG AND THE STRUCTURE, MEASURED FROM THE BOTTOM OF THE OVERFLOW OPENINGS TO THE STRUCTURE WALL.
2. GEOTEXTILE FABRIC TYPE FF FOR FLAPS, TOP AND BOTTOM OF OUTSIDE OF FILTER BAG. FRONT, BACK, AND BOTTOM OF FILTER BAG BEING ONE PIECE.
3. FRONT LIFTING FLAP IS TO BE USED WHEN REMOVING AND MAINTAINING FILTER BAG.
4. SIDE FLAPS SHALL BE A MAXIMUM OF TWO INCHES LONG. FOLD THE FABRIC OVER AND REINFORCE WITH MULTIPLE STITCHES.
5. FLAP POCKETS SHALL BE LARGE ENOUGH TO ACCEPT WOOD 2" x 4". THE REBAR, STEEL PIPE, OR WOOD SHALL BE INSTALLED IN THE REAR FLAP AND SHALL NOT BLOCK THE TOP HALF OF THE CURB FACE OPENING.

MAINTENANCE NOTES

1. WHEN REMOVING OR MAINTAINING INLET PROTECTION, CARE SHALL BE TAKEN SO THAT THE SEDIMENT TRAPPED IN THE FABRIC DOES NOT FALL INTO THE STRUCTURE. MATERIAL THAT HAS FALLEN INTO THE INLET SHALL BE IMMEDIATELY REMOVED.

STORM DRAIN INLET PROTECTION

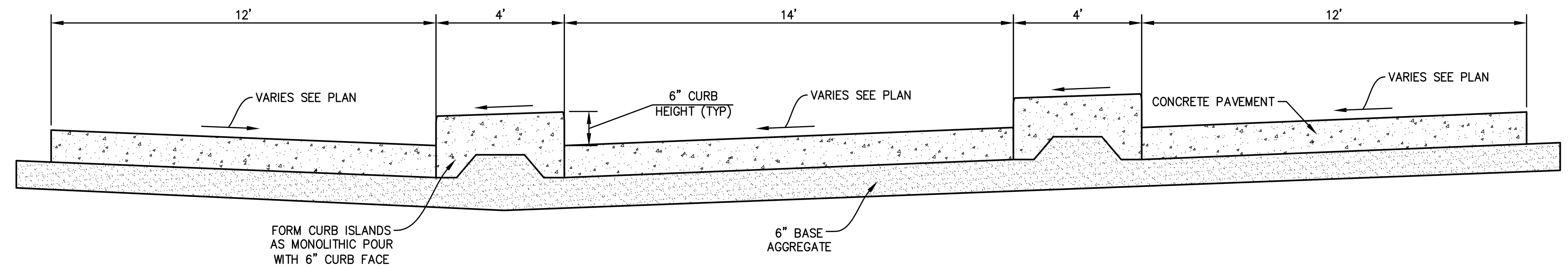

SECTION A-A

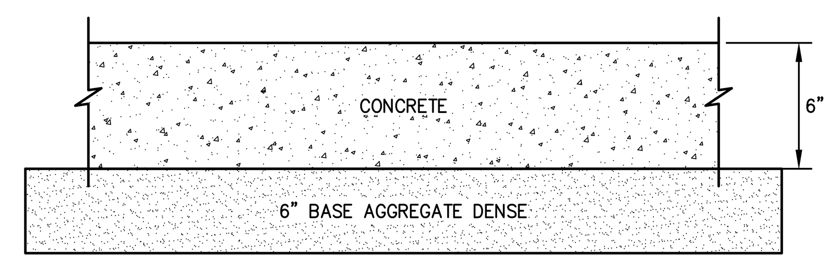

DUMP STATION CONCRETE PAVEMENT

NOTES:
1. BOXOUT AT EACH RECEPTOR SHALL FLOW TOWARDS 4" HATCH @4% MIN.
2. CONCRETE PAVEMENT SHALL BE SLOPED UNIFORMLY AWAY FROM THE RECEPTOR BOXOUT SO RAIN WATER IS DIRECTED AWAY FROM THE RECEPTOR PERIMETER.
3. CONCRETE PAVEMENT ON WHICH THE R.V. SITS SHALL PITCH TOWARD THE DRIVERS LEFT TO PROMOTE FULL TANK DRAIN-OUT.
4. THE SPOT GRADES SHOWN AT EACH HATCH (602.30 TO 601.75) ARE THE CONCRETE GRADES SLIGHTLY BEYOND THE HATCH. DISH OUT THE HATCH SLIGHTLY TO PROMOTE FULL DRAINAGE OF THE RECEPTOR PAVEMENT TO THE HATCH. ENSURE CONCRETE IS FORMED SO FOOT VALVE ON LID IS FULLY OPERATIONAL. HATCH SHALL BE TOWER COMPANY #05425 WITH FOOT LEVER AND LOCKABLE.
5. INSTALL ROMORT (OR APPROVED EQUAL) WATER TOWER KIT FOR NON-POTABLE USE. AFFIX PREPRINTED 12"X9" ALUMINUM SIGN TO TOWER LABELED "NON-POTABLE WATER".
6. INSTALL STREET SIGN POST WITH TWO PRE-PRINTED ALUMINUM SIGNS ("DISPOSAL" SIGNS PLUS 4 STEP INSTRUCTION SIGN) AT EACH RECEPTOR.
7. INSTALL SIX PAINTED ARROW PAVEMENT MESSAGE MARKING DIRECTION OF TRAVEL.

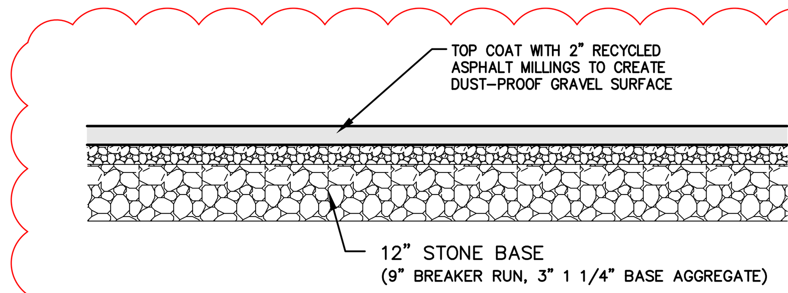

GRAVEL DRIVE DETAIL

1

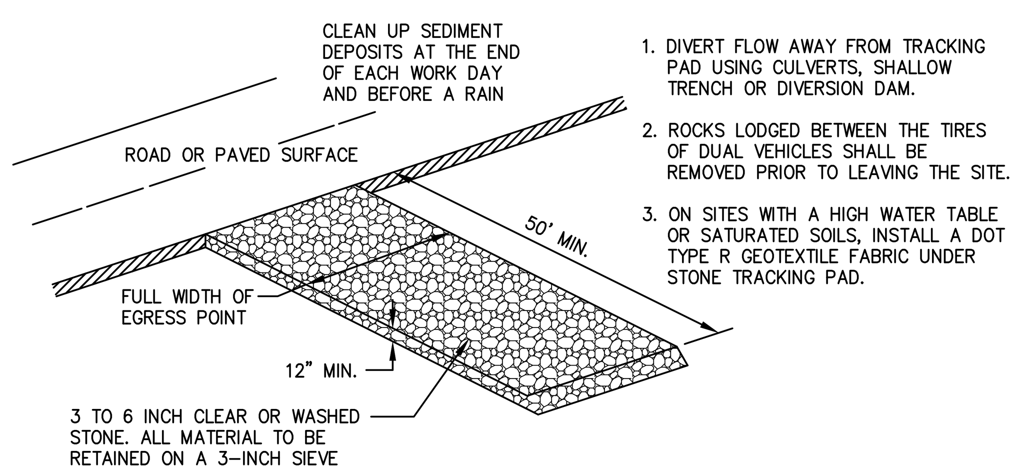

1. DIVERT FLOW AWAY FROM TRACKING PAD USING CULVERTS, SHALLOW TRENCH OR DIVERSION DAM.
2. ROCKS LODGED BETWEEN THE TIRES OF DUAL VEHICLES SHALL BE REMOVED PRIOR TO LEAVING THE SITE.
3. ON SITES WITH A HIGH WATER TABLE OR SATURATED SOILS, INSTALL A DOT TYPE R GEOTEXTILE FABRIC UNDER STONE TRACKING PAD.

TRACKING PAD DETAIL

NOTE: ADDITIONAL POST DEPTH OR TIE BACKS MAY BE REQUIRED IN UNSTABLE SOILS

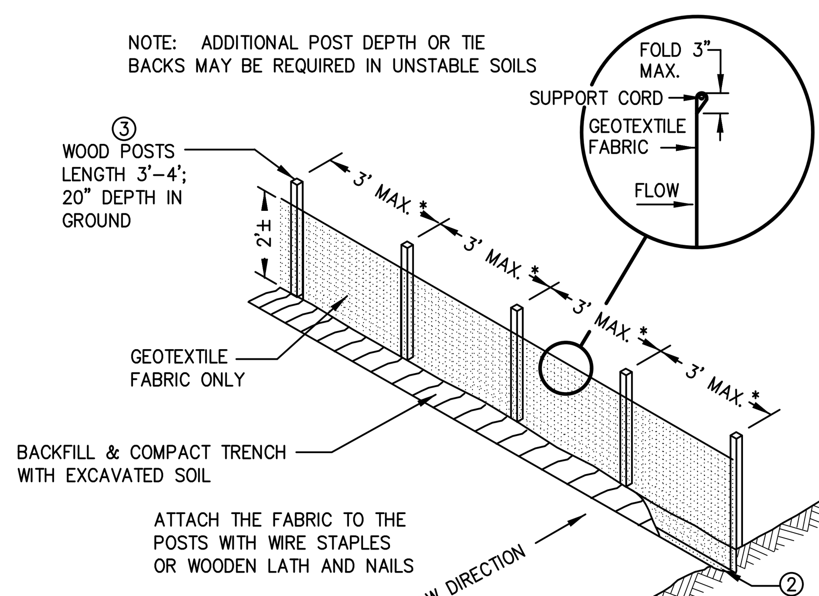

SILT FENCE

NOTE: 8'-0" POST SPACING ALLOWED IF A WOVEN GEOTEXTILE FABRIC IS USED.

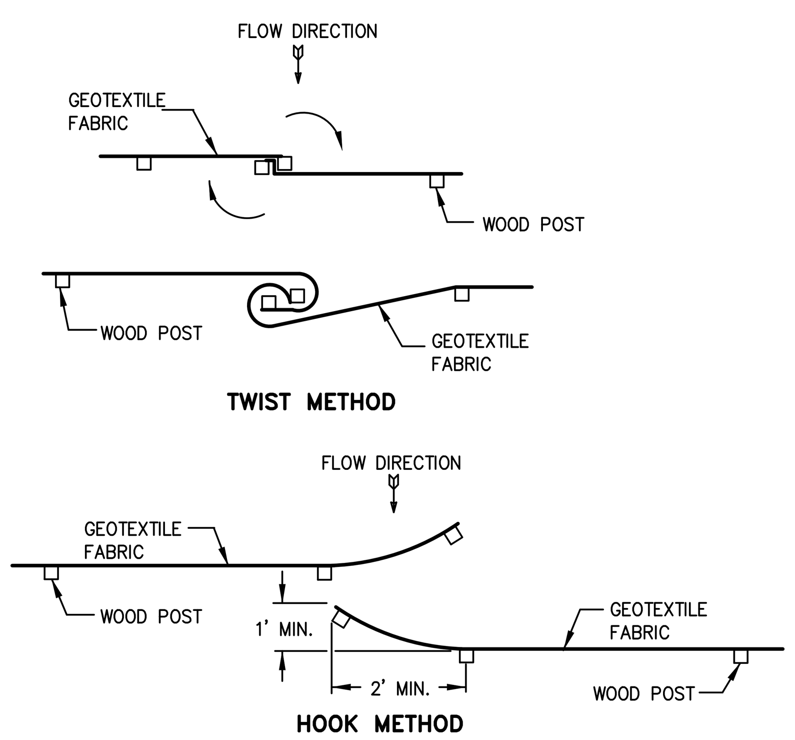

JOINING TWO LENGTHS OF SILT FENCE ⑤

This drawing based on Wisconsin Department of Transportation Standard Detail Drawing 8 E 9-6.

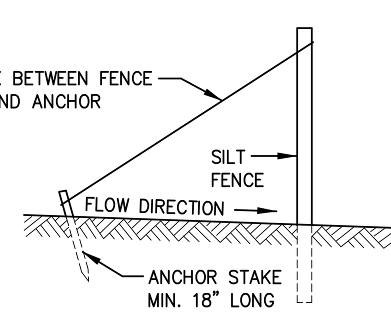

SILT FENCE TIE BACK

(WHEN ADDITIONAL SUPPORT REQUIRED)

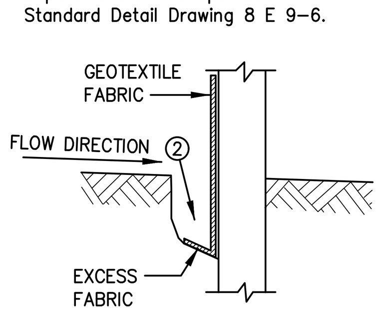

TRENCH DETAIL

GENERAL NOTES

① HORIZONTAL BRACE REQUIRED WITH 2" X 4" WOODEN FRAME OR EQUIVALENT AT TOP OF POSTS.
② TRENCH SHALL BE A MINIMUM OF 4" WIDE & 6" DEEP TO BURY AND ANCHOR THE GEOTEXTILE FABRIC. FOLD MATERIAL TO FIT TRENCH AND BACKFILL & COMPACT TRENCH WITH EXCAVATED SOIL.
③ WOOD POSTS SHALL BE A MINIMUM SIZE OF 1 1/8" X 1 1/8" OF OAK OR HICKORY
④ SILT FENCE TO EXTEND ACROSS THE TOP OF THE PIPE.
⑤ CONSTRUCT SILT FENCE FROM A CONTINUOUS ROLL IF POSSIBLE BY CUTTING LENGTHS TO AVOID JOINTS. IF A JOINT IS NECESSARY USE ONE OF THE FOLLOWING TWO METHODS; A) OVERLAP THE END POSTS AND TWIST, OR ROTATE, AT LEAST 180 DEGREES, B) HOOK THE END OF EACH SILT FENCE LENGTH.

SILT FENCE DETAIL

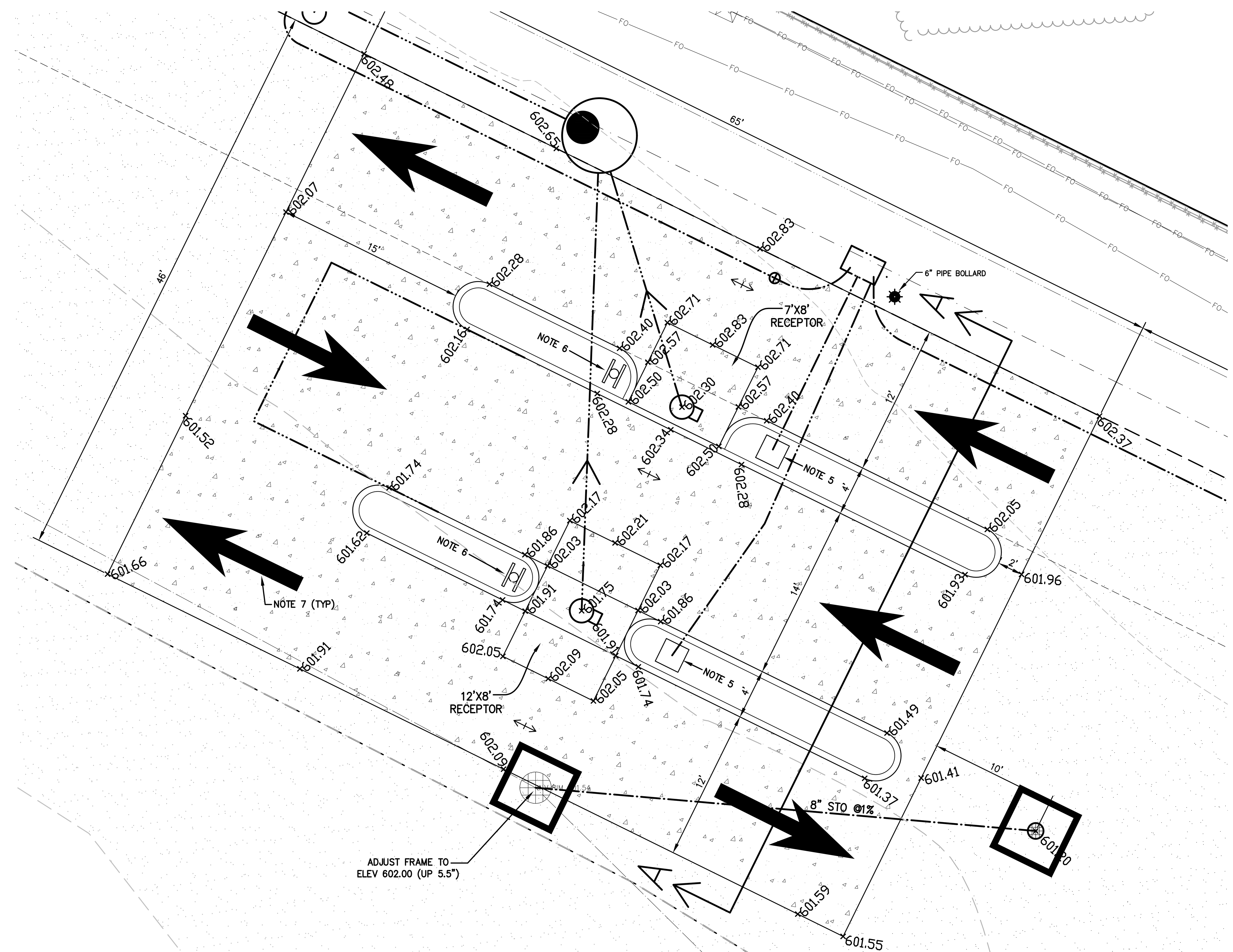

DUMP STATION DETAIL

SCALE: 1" = 5'

McMAHON
ENGINEERS ARCHITECTS
McMAHON ASSOCIATES, INC.
1445 McMAHON DRIVE NEENAH, WI 54956
Mailing: P.O.BOX 1025 NEENAH, WI 54957-1025
PH 920.751.4200 FX 920.751.4284 MCMGRP.COM

McMahon Associates, Inc. provides this drawing & data, regardless of form; as instruments of service. All rights including copyrights are retained by McMahon Associates, Inc. The client and/or recipient agrees to the fullest extent permitted by law to indemnify and hold McMahon Associates, Inc. harmless for any reuse of or changes made to the original drawing or data without prior written consent by McMahon Associates, Inc.

NO.	DATE	REVISION
1	10/19/20	REVISED GRAVEL DETAIL & RENUMBERED SHEET

BROWN COUNTY FAIR GROUNDS: RESTROOM FACILITY AND DUMP STATION
BROWN COUNTY 1500 FT HOWARD AVE, DE PERE, WI 54115
MISCELLANEOUS DUMP STATION SITEWORK DETAILS

DESIGNED	DRAWN
–	–

PROJECT NO. B0633 6-20-00119
DATE JULY 15, 2020
SHEET NO. C112

rschmechel, W:\PROJECTS\B0633\62000119\CADD\Civil3D\Plan Sheets\Title-Notes-Details.dwg, c112 miscellaneous dump station sitework details, Plot Date: 10/19/2020 12:06 PM, xrefs: (meter piping detail, x-prop shade brown county fairgrounds, x-exist shade brown county fairgrounds, x-exist topo brown county fairgrounds, x-prop info brown county fairgrounds, brown county fairgrounds bndry comps dew, mcm conv field data_062320)
W:\PROJECTS\B0633\62000119\CADD\Civil3D\Plan Sheets\Title-Notes-Details.dwg, C112 Miscellaneous Dump Station Sitework Details, 10/19/2020 12:06:32 PM, RSchmechel, 1:1

Parcels	WD-57, WD-67, WD-70-1			
Site SF	1,571,206			

Existing Site Info	Percent Site Coverage	Percent Open Space	Floor Area Ratio	Building SF
	27.8%	72.2%	6.2%	97,437

Proposed Site Info	Percent Site Coverage	Percent Open Space	Floor Area Ratio	Building SF
	29%	71.0%	6.4%	100,865

Mapped Features

- Existing Pervious Surface
- Existing Impervious Surface
- Construction Location
- Brown County Owned Parcel Line
- Parcel Line

Source: Brown County, 2020.

Disclaimer: The property lines, right-of-way lines, and other property information on this drawing were developed or obtained as part of the County Geographic Information System or through the County property tax mapping function. McMAHON ASSOCIATES, INC. does not guarantee this information to be correct, current, or complete. The property and right-of-way information are only intended for use as a general reference and are not intended or suitable for site-specific uses. Any use to the contrary of the above stated uses is the responsibility of the user and such use is at the user's own risk.

0 200 400 Feet

McMAHON ENGINEERS ARCHITECTS
McMAHON ASSOCIATES, INC.

FIGURE 1
PERVIOUS/IMPERVIOUS SURFACES AND STATISTICS
BROWN COUNTY FAIRGROUND IMPROVEMENTS
CITY OF DEPERE
BROWN COUNTY, WISCONSIN

w:\PROJECTS\B0633\62000119\CADD\GIS\Impervious_Stats_B.mxd October 16, 2020 kpk

City of De Pere, Wisconsin

Request For Plan Commission Action

MEETING DATE:	**October 26, 2020**
DEPARTMENT:	**Planning**
FROM:	**Daniel Lindstrom**
SUBJECT:	**Discussion regarding the RFP process and structure alternatives for the Comprehensive Plan and Downtown Plan Updates.**