Plan Commission

Regular Meeting

335 South Broadway
De Pere, WI 54115
http://www.de-pere.org

Agenda

Monday, July 27, 2015 | 7:00 PM | De Pere City Hall Council Chambers

Pursuant to Wisconsin Statutes 19.84, Notice is hereby given to the public that a meeting of the **Plan Commission** of the City of De Pere will be held on **July 27, 2015** at **7:00 PM** in the **De Pere City Hall Council Chambers, 335 S. Broadway Street, De Pere, WI 54115.**

This meeting can be viewed LIVE at www.depere.tv. This meeting is also rebroadcast on TW Cable Channel 4 and AT&T U-verse Channel 99 throughout the week and available on demand at www.depere.tv.

Call to Order

1. Roll Call.
2. Approval of the minutes of the June 22, 2015 Plan Commission meeting.
3. Land and Location Proposal for De Pere Fire Station 3.*
4. Review the Conditional Use Application for St. Norbert College, to allow for food trucks.*
5. Review the Site Plan application for a 4,803 sq.ft. addition to Cyntrx, parcel ED-F0081-3 (2080 Profit Place). Application: Smet Investments LLC.
6. Review the CSM Application for a single lot CSM on Scheuring Rd. Surveyor: Excel Engineering Inc.
7. Review the CSM Application for an extraterritorial CSM for 2 lot CSM in the Town of Lawrence. Surveyor: Vande Hei.*

Adjournment

*** Items with an asterisk require City Council approval.**

Any person wishing to attend this meeting who, because of disability, requires special accommodations should contact the City Planner's office at 339-4043 by Noon on Monday, July 27th, 2015 so that arrangements can be made.

AGENDA SENT TO:
Plan Commission Members
Alderpersons
News Media
St. Norbert College
St. Norbert College neighborhood residents
Smet Investments LLC
Excel Engineering Inc
Vande Hei Surveying

City of De Pere, Wisconsin

Request For Plan Commission Action

MEETING DATE:	**July 27, 2015**
DEPARTMENT:	**Planning**
FROM:	**Sarah Wallace**
SUBJECT:	**Approval of the minutes of the June 22, 2015 Plan Commission meeting.**

ATTACHMENTS:

- PC_Jun2015_Minutes_Draft (PDF)

Plan Commission

Regular Meeting

335 South Broadway
De Pere, WI 54115
http://www.de-pere.org

Draft Minutes

Monday, June 22, 2015 **7:00 PM** **De Pere City Hall Council Chambers**

Call to Order

The meeting was called to order at 7:00 PM by Mayor Michael J. Walsh

Attendee Name	Title	Status	Arrived
Derek Beiderwieden	Commissioner	Excused	
James Boyd	Alderperson	Present	
Jim Kalny	Commissioner	Excused	
Larry Lueck	Alderperson	Present	
Elizabeth Runge	Commissioner	Excused	
Steve Taylor	Commissioner	Present	
Michael J. Walsh	Mayor	Present	

Also present: city Planners Ken Pabich and Sarah Wallace, and members of the public.

2. Approval of the minutes of the May 26, 2015 Plan Commission meeting.

RESULT:	**ADOPTED [UNANIMOUS]**
MOVER:	James Boyd, Alderperson
SECONDER:	Steve Taylor, Commissioner
AYES:	James Boyd, Larry Lueck, Steve Taylor, Michael J. Walsh
EXCUSED:	Derek Beiderwieden, Jim Kalny, Elizabeth Runge

3. Review the Site Plan application for an addition for the Belmark Expansion project, Parcels ED-F0094 and ED-F0094-3 (Heritage Rd.) Applicant: The Boldt Company.

RESULT:	**ADOPTED [UNANIMOUS]**
MOVER:	Michael J. Walsh, Mayor
SECONDER:	Steve Taylor, Commissioner
AYES:	James Boyd, Larry Lueck, Steve Taylor, Michael J. Walsh
EXCUSED:	Derek Beiderwieden, Jim Kalny, Elizabeth Runge

4. Review the Conditional Use Application for student housing at 620 Fourth Street. Applicant: St. Norbert College.*

Sarah Wallace reviewed the application and noted that the majority of the surrounding property is owned by the college.

RESULT:	**ADOPTED [UNANIMOUS]**
MOVER:	Michael J. Walsh, Mayor
SECONDER:	James Boyd, Alderperson
AYES:	James Boyd, Larry Lueck, Steve Taylor, Michael J. Walsh
EXCUSED:	Derek Beiderwieden, Jim Kalny, Elizabeth Runge

5. Review the Conditional Use Application for student housing at 325 Marsh Street. Applicant: St. Norbert College.*

Attachment: PC_Jun2015_Minutes_Draft (3744 : Minutes Approval)

RESULT:	**ADOPTED [UNANIMOUS]**
MOVER:	James Boyd, Alderperson
SECONDER:	Larry Lueck, Alderperson
AYES:	James Boyd, Larry Lueck, Steve Taylor, Michael J. Walsh
EXCUSED:	Derek Beiderwieden, Jim Kalny, Elizabeth Runge

6. Review the Rezoning Application to rezone WD-52, WD-59 and part of WD-60 from General Industrial (I-3) to Residential District with a Planned Development District Overlay (R-3 PDD). Applicant: Commonwealth Development.*

Sarah Wallace described the developer's request to modify the previous rezoning request and general development plan in order to include a clinic on the site. The number of housing units will not change; parking will be modified and garages will be expanded.
Mayor Walsh motioned, seconded by James Boyd, to open the meeting for public comments. Upon vote, motion carried unanimously.
Kevin McDonell, vice president of development for Commonwealth, explained that they were approached by NEWCAP Inc, who has five similar clinics throughout the state. The clinic would be located in the front of the mid-rise building; they are also proposing to include offices for business development and skills training. Mr. McDonell stated that it is a great opportunity to provide service to tenants and the area, and will help set their WHEDA application apart.
Mayor Walsh motioned, seconded by Larry Lueck, to return to regular order. Upon vote, motion carried unanimously.
Mayor Walsh motioned, seconded by Steve Taylor, to approve the rezoning request and forward to City Council. Upon vote, motion carried unanimously.

RESULT:	**ADOPTED [UNANIMOUS]**
MOVER:	Michael J. Walsh, Mayor
SECONDER:	Steve Taylor, Commissioner
AYES:	James Boyd, Larry Lueck, Steve Taylor, Michael J. Walsh
EXCUSED:	Derek Beiderwieden, Jim Kalny, Elizabeth Runge

7. Review Vacation Application to vacate a portion of the right of way for Fort Howard Avenue. Applicant: Commonwealth.*

Sarah Wallace explained that the vacation request refers to the area bordering Fort Howard Av. The applicant is requesting this as additional green space for the development, but it is not required as a condition for approval of the site plan.

RESULT:	**ADOPTED [UNANIMOUS]**
MOVER:	James Boyd, Alderperson
SECONDER:	Michael J. Walsh, Mayor
AYES:	James Boyd, Larry Lueck, Steve Taylor, Michael J. Walsh
EXCUSED:	Derek Beiderwieden, Jim Kalny, Elizabeth Runge

8. Review and presentation by WisDOT on the design for HWY 57 (North Broadway).*

Andrew Fulcer and John Rethke from the Wisconsin DOT reviewed the design proposal and project timeline. They reported that the DOT conducted a speed study in June of 2014, and they are recommending that the speed limit remain 35 MPH. The DOT is open to studying the speed limit again when the project is completed.

Attachment: PC_Jun2015_Minutes_Draft (3744 : Minutes Approval)

Resident Susan Gallagher-Lepak expressed concern about the 35 MPH speed limit and pedestrian safety in the crosswalk
Fulcer explained that based on their calculations, the DOT recommends not artificially lowering the speed limit, which causes more variability in traffic and creates problems with crossing, turning out, etc. They prefer to use visual design factors to create a tunnel effect and natural speed control. Pedestrian refuges are a benefit because they only have to cross two lanes at a time and look one way. Flashing beacons, a pedestrian-activated signal, etc are a possibility but would be a city expense.
Resident Gary Neville also feels the speed limit is an issue. He inquired if portions of the Abbey Pond would have to be filled in as part of the project. The DOT tries to avoid filling in wetlands, but it will be a minor amount for this project.
Resident Frank Manders suggested using a camera at the cross walk to control speed.
Allouez resident Anne Waystedt inquired what recourse there is for private residents who stand to lose property with the redesign; the DOT provided her with contact information.
Resident Susan Moore inquired about the parameters of the project and if it would impact the retaining wall in front of her home. Ken Pabich stated that her property is outside of project limits.
Mayor Walsh motioned, seconded by James Boyd, to return to regular order. Upon vote, motion carried unanimously.
Mayor Walsh motioned, seconded by James Boyd, to recommend approval of the redesign with reservations on the recommended speed limit. Upon vote, motion carried unanimously.

RESULT:	**ADOPTED [UNANIMOUS]**
MOVER:	Michael J. Walsh, Mayor
SECONDER:	James Boyd, Alderperson
AYES:	James Boyd, Larry Lueck, Steve Taylor, Michael J. Walsh
EXCUSED:	Derek Beiderwieden, Jim Kalny, Elizabeth Runge

9. Review the proposed design changes to the intersection of Grant Street at Apollo and Suburban.*

Ken Pabich explained that city staff has analyzed the intersection to address safety concerns. The county is willing to review proposals and provide concurrence, but the project would be at city expense. The costs to realign the intersection or install a roundabout would be significant, so staff is assessing what can be done to improve the safety of the existing intersection. The Public Works department put out cones to simulate bumpouts and observed their effect on traffic flow. They reported some additional queuing but no significant backups. In essence the bumpouts would push out the curb in order to slow down traffic and narrow the distance for pedestrians to cross. Discussion followed regarding a similar project near Dickinson School.
Mayor Walsh motioned, seconded by Steve Taylor, to open the meeting for public comments. Upon vote, motion carried unanimously.
Resident Larry Dehn spoke against the redesign. He pointed out that the city widened Suburban Drive a few years ago but this project would reverse that. He suggested moving the crosswalk further east on the other side of Apollo Way as an alternative, as well as additional signage and police presence.

Attachment: PC_Jun2015_Minutes_Draft (3744 : Minutes Approval)

Resident Frank Manders spoke against the plan, stating that there are already traffic backups with the current design.
Resident George Slack described difficulties with traffic and utilizing his driveway. He also spoke in favor of moving the crosswalk to the other side of Apollo Way.
Resident Jerry Sauer expressed concern about traffic speeds and the amount of cars using the intersection.
Resident John Delaney inquired if traffic counts have been conducted recently, and expressed concern about bottlenecks. He also questioned the width of the lanes with bumpouts, and suggested lights at the crosswalk.
Resident Susan Moore suggested crosswalk lights as well as public service announcements to reinforce the state law requiring drivers to stop at crosswalks.
Sarah Wallace received a suggestion from resident Eric Peterson to end Apollo Way in a cul de sac.
Mayor Walsh motioned, seconded by James Boyd, to return to regular order. Upon vote, motion carried unanimously.
Ken Pabich addressed the public comments. While there is still room for a vehicle to bypass a car waiting to turn left onto Suburban, traffic would back up if there are several cars stacked. However, when staff modeled it, it worked and the queues cleared. Staff analyzed moving the crosswalk to the east of Apollo Way and concluded it would not work as well. Closing off Apollo was suggested early in the project, but that option would significantly hamper traffic.
They have evaluated different types of lights (flashing, pedestrian-activated, red/green); however they are difficult to implement at an offset intersection and cost is a factor.
Mayor Walsh motioned, seconded by Larry Lueck, to open the meeting for public comments. Upon vote, motion carried unanimously.
Frank Manders spoke in favor of the second design option.
Mayor Walsh motioned, seconded by James Boyd, to return to regular order. Upon vote, motion carried unanimously.
Discussion followed regarding the ability for Grant Street residents to exit their driveways; concerns about funneling two lanes of traffic down to one; and the possibility of extending the school speed limit reduction zone.
Mayor Walsh motioned, seconded by Larry Lueck, to open the meeting for public comments. Upon vote, motion carried unanimously.
Frank Manders spoke again in favor of the second design option.
George Slack expressed concern about the ability of disabled people to use the bumpouts, and was assured that the curb entries will be standard.
Mayor Walsh motioned, seconded by James Boyd, to return to regular order. Upon vote, motion carried unanimously.
James Boyd motioned, seconded by Mayor Walsh, to approve the design option recommended by staff and forward to City Council. Upon vote, motion carried unanimously.

Attachment: PC_Jun2015_Minutes_Draft (3744 : Minutes Approval)

RESULT:	**ADOPTED [UNANIMOUS]**
MOVER:	James Boyd, Alderperson
SECONDER:	Michael J. Walsh, Mayor
AYES:	James Boyd, Larry Lueck, Steve Taylor, Michael J. Walsh
ABSENT:	Jim Kalny, Elizabeth Runge
EXCUSED:	Derek Beiderwieden

10. Review the project proposal from DLZ for a roundabout study for Main Av and Lawrence Dr.*

RESULT:	**ADOPTED [UNANIMOUS]**
MOVER:	Michael J. Walsh, Mayor
SECONDER:	Steve Taylor, Commissioner
AYES:	James Boyd, Larry Lueck, Steve Taylor, Michael J. Walsh
EXCUSED:	Derek Beiderwieden, Jim Kalny, Elizabeth Runge

11. Review the zoning text amendment regarding telecommunication mobile service facilities (Chapter 14.37(1)).*

Sarah Wallace explained that the purpose of the amendment is to regulate cell tower facilities to the full extent allowed by state statute. Larry Lueck noted that he must abstain from voting on this item. Due to the lack of a quorum, this item will go forward to Council without a recommendation from the Plan Commission.

RESULT:	**NO ACTION [UNANIMOUS]**
AYES:	James Boyd, Larry Lueck, Steve Taylor, Michael J. Walsh
EXCUSED:	Derek Beiderwieden, Jim Kalny, Elizabeth Runge

12. Review the CSM Application for a CSM with two outlots and a road dedication for the re-configuration of Washington Street. Surveyor: Robert E Lee.*

Sarah Wallace reported that this CSM will allow the reconfiguration of Washington St to proceed.

RESULT:	**ADOPTED [UNANIMOUS]**
MOVER:	Michael J. Walsh, Mayor
SECONDER:	Larry Lueck, Alderperson
AYES:	James Boyd, Larry Lueck, Steve Taylor, Michael J. Walsh
EXCUSED:	Derek Beiderwieden, Jim Kalny, Elizabeth Runge

13. Review of Orion's Run Second Addition Final Plat, located south of the City limits off Lawrence Drive in the Town of Lawrence. Surveyor: Mach IV Engineering and Surveying LLC.*

RESULT:	**ADOPTED [UNANIMOUS]**
MOVER:	James Boyd, Alderperson
SECONDER:	Steve Taylor, Commissioner
AYES:	James Boyd, Larry Lueck, Steve Taylor, Michael J. Walsh
EXCUSED:	Derek Beiderwieden, Jim Kalny, Elizabeth Runge

Adjournment

Mayor Walsh motioned, seconded by Steve Taylor, to adjourn the meeting at 8:55 PM. Upon vote, motion carried unanimously.

Attachment: PC_Jun2015_Minutes_Draft (3744 : Minutes Approval)

Respectfully submitted,
Carey Danen

Attachment: PC_Jun2015_Minutes_Draft (3744 : Minutes Approval)

City of De Pere, Wisconsin

Request For Plan Commission Action

MEETING DATE: **July 27, 2015**

DEPARTMENT: **Planning**

FROM: **Sarah Wallace**

SUBJECT: **Land and Location Proposal for De Pere Fire Station 3.***

ATTACHMENTS:

- Planning Commission Request for Land Location Proposal for Stat 3 (DOCX)
- Station3_Area24x36 (PDF)
- Station3_Site (PDF)

Memo

To: Honorable Mayor Michael Walsh

Members of the De Pere Planning Commission

From: Dennis L. Rubin, Fire Chief

Date: July 7, 2015

Re: Land and Location Proposal for De Pere Fire Station 3

The Fire Department would like to request the support and approval of the De Pere Planning Commission to procure the land to construct Fire Station 3 in the southwest quadrant of our City. After careful consideration and with much discussion, the Fire Department believes that the City of De Pere owned site located on American Boulevard at Red Maple Road consisting of 2.93 acres of land would be a desirable site location to build the next De Pere Fire – Rescue Station. This parcel of land has the legal description as WD-L179-3.

The location of this property will provide the needed response time coverage to the south and west quadrants of De Pere. Currently, the area that this proposed fire station would provide response coverage for does exceed the five (5) minute response time goal set by the Department. As the Planning Commission is aware, emergency response times are mission critical when help is needed to manage an emergency medical or fire response call for assistance from our citizens and visitors.

Public safety is the bedrock of a community's vitality ensuring that folks feel safe and secure in the homes, places of employment, schools and recreation facilities. With the addition of the proposed De Pere Fire Station, the city will be properly covered by fire engines and ambulances.

As a quick review, the best time to intervene at a life threating emergency medical response is no more than four to six minutes (hence the reason why the 5 minute response target time was selected). In this window of time, the "survivable patient" has the very best chance of recovering from their injuries or illness and returning to a normal productive life. Using the analogy of a traffic light, the lens color at this point would be green (potential savable patient).

If the emergency response window is stretched from seven to ten minutes, the patient outcomes will likely not be as acceptable. Permanent and irreversible brain damage will likely

Attachment: Planning Commission Request for Land Location Proposal for Stat 3 (3739 : Fire Station 3)

occur with patients that are breathless and pulseless (their heart has stopped) for periods of time longer than six minutes. If bleeding is substantial and not controlled or replaced (with IV fluids), death is highly likely. The yellow lens is now lit, using the traffic light comparison. The margin is very thin to save a human life of someone that the response time exceeds the five minute response standard.

Increase the paramedic care arrival time to ten minutes or beyond and death is the most likely patient outcome. Life-saving care and transportation to an appropriate hospital after such a long time delay is generally futile. The traffic light has now lit up red and as such the notion is that the critical patient is no longer savable. In true emergency cases, it is rare to experience saving a life if the response time is ten minutes or longer. In the few true emergency cases that patients do survive long delay in receiving care, their recover is very slow and with substantive brain damage.

As a further benefit and opportunity, this location will be desirable to both of our neighboring fire departments. We are in discussions with both Lawrence and Ledgeview Fire Departments to determine the best and most efficient use of a fire station building at the proposed location. Both agencies have expressed a willingness to continue to discuss exploring just how a tri-community approach might be the most efficient and effective for all. The focus will be on service delivery and not on any one changing or losing their communities unique identity. In fact, these discussions have led us to explore the possibilities of establishing a joint training program that will be mutually beneficial. Ashwaubenon Public Safety Department has expressed an interest in possibly locating an ambulance in the Grant Street Fire Station (west side). To have all three communities working closer together with us to provide the best services possible to this portion of Brown County, will be in the best interest for all concerned.

Finally, once the new fire station site is determined, the design phase of the project will be added to the City's seven year Capital Improvement Budget starting in 2017. Design is tentatively scheduled to be completed in 2024 with construction tentatively scheduled for 2025.

The plat plan for this property, as well as the 5 minute response zones, is included as attachments for your review. If the De Pere Planning Commission would consider approval of this request for final action by the Common Council, it would be greatly appreciated. Thank you for your consideration of this request. I stand ready to respond to any questions that the Commission may have at this time.

Attachment: Planning Commission Request for Land Location Proposal for Stat 3 (3739 : Fire Station 3)

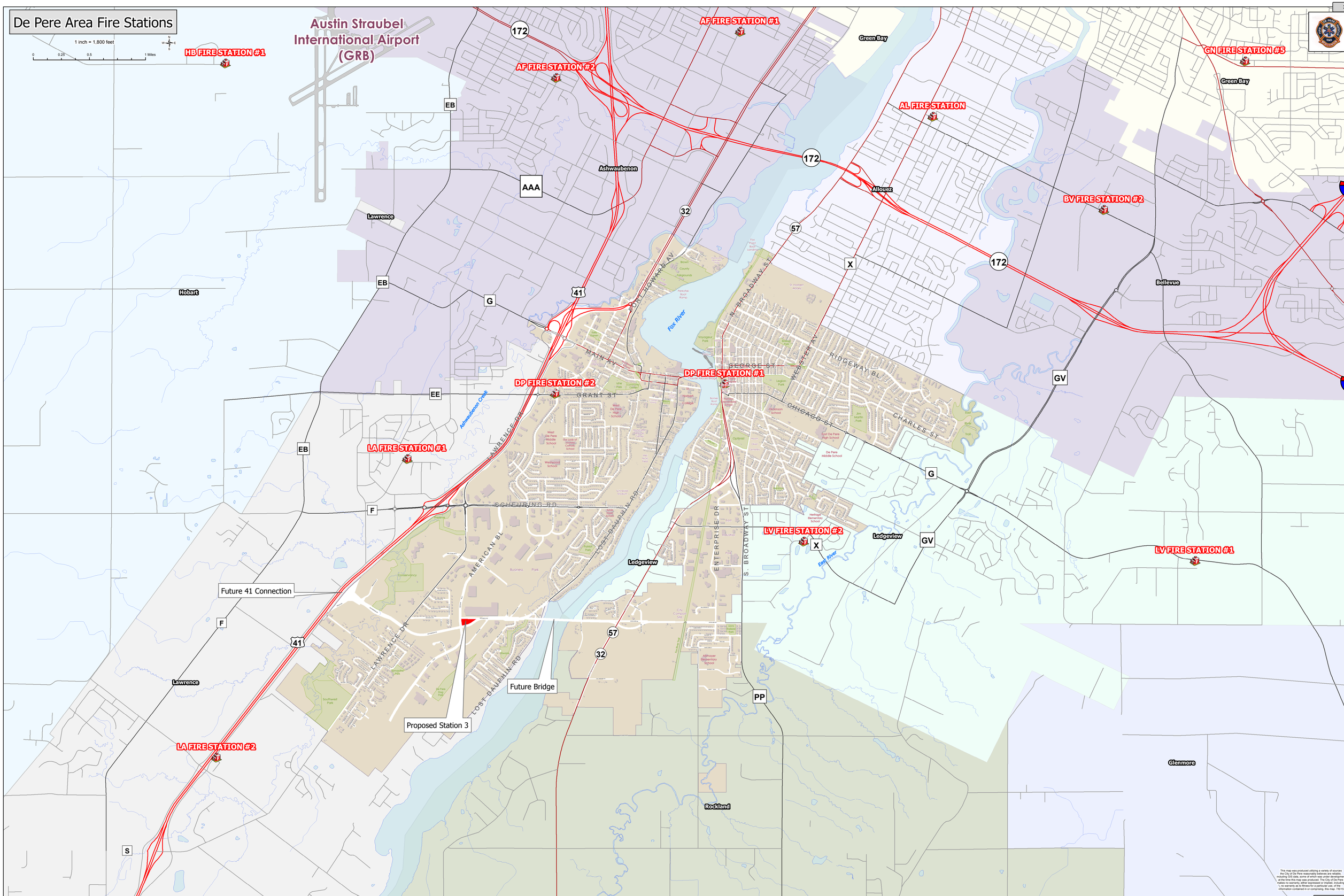
De Pere Area Fire Stations
1 inch = 1,800 feet
0 0.25 0.5 1 Miles
Austin Straubel International Airport (GRB)
HB FIRE STATION #1
AF FIRE STATION #1
AF FIRE STATION #2
AL FIRE STATION
GN FIRE STATION #5
BV FIRE STATION #2
DP FIRE STATION #1
DP FIRE STATION #2
LA FIRE STATION #1
LA FIRE STATION #2
LV FIRE STATION #1
LV FIRE STATION #2
Green Bay
Ashwaubenon
Allouez
Lawrence
Hobart
Bellevue
Ledgeview
Rockland
Glenmore
Fox River
East River
Ashwaubenon Creek
Future 41 Connection
Future Bridge
Proposed Station 3
172
EB
AAA
32
57
X
41
G
EE
F
GV
PP
S
FORT HOWARD AV
N. BROADWAY ST
MAIN AV
GEORGE ST
WEBSTER AV
RIDGEWAY BL
GRANT ST
CHICAGO ST
CHARLES ST
LAWRENCE DR
SCHEURING RD
AMERICAN BL
LOST DAUPHIN RD
ENTERPRISE DR
S. BROADWAY ST
Business Park
Southwest Park
Heritage Elementary School
Allhayer Elementary School
Legion Park
Jim Martin Park
Dickinson School
Wellwood School
West De Pere High School
East De Pere High School
De Pere Middle School
Optimist
Fox Point Boat Landing
Brown County Fairgrounds
Perkofski Boat Ramp
St Norbert Abbey
Voyageur Park
Eddy Garrett
Fox Point Boat Landing
Northern Colleges
Bonnet Boat Ramp
Schneider Park
Pierce Park
Pierce Park Boat Ramp
Lawrence Park
Southwest Park
Ashwaubenon Creek
Conservancy
Business Park
Lawrence
Hobart
Bellevue
Ledgeview
Rockland
Glenmore
Green Bay
Attachment: Station3_Area24x36 (3739 : Fire Station 3)
This map was produced utilizing a variety of sources the City of De Pere reasonably believes are reliable, including GIS data, some of which was under development at the time this map was produced. The City of De Pere makes no warranty, either expressed or implied, including \, no warranty as to fitness for a particular use, of the information contained in or comprising, this map. 7/6/15

De Pere Fire Rescue- Proposed Station 3

1 inch = 80 feet

Legend

- Proposed Site- Station 3
- Example Building Rendering
- Driveway Rendering
- Storm Manhole
- Storm Catch Basin
- Collectors
- Culvert
- Open Channel
- Sanitary Manhole
- Sanitary Gravity Main
- Hydrant
- Curb Box
- Gate
- Butterfly
- Water Main

Site Specifications-
Parcels:
WD-L179-3
WD-L179-4
WD-L179-5-1

Total Acreage: ±2.93 Acres
Parcel Owner: City of De Pere
Utilities: Adjacent, Confirm laterals with Engineering
FEMA Flood Zone: None
DNR Wetlands: None
Zoning: Current I-3, General Industrial.
Recommended Re-Zoning to PPD, Planned Development District

American Blvd

Future Vacated Red Maple Road

±688.5'

2.93 Acres

±298.7'

±729.5'

Future South Bridge

South Bridge Road

8 inch PVC
12 inch PVC
24 inch PVC

This map was produced utilizing a variety of sources the City of De Pere reasonably believes are reliable, including GIS data, some of which was under development at the time this map was produced. The City of De Pere is not responsible for any errors or omissions in this map. We make no warranty as to fitness for a particular use, of the the information contained in or comprising, this map. 7/1/15

Attachment: Station3_Site (3739 : Fire Station 3)

City of De Pere, Wisconsin

Request For Plan Commission Action

MEETING DATE:	**July 27, 2015**
DEPARTMENT:	**Planning**
FROM:	**Sarah Wallace**
SUBJECT:	**Review the Conditional Use Application for St. Norbert College, to allow for food trucks.***

ATTACHMENTS:

- PC_Staff_July27_CU (PDF)
- SNC CU_Food Truck (PDF)

Item 4: Review the Conditional Use Application for SNC, to allow for food trucks for SNC Day.*

A Conditional Use Application was submitted by Saint Norbert College to allow for food trucks to be allowed within St. Norbert College (SNC) on Campus Grounds. For SNC College Day, Homecoming, Fourth of July Firecracker Run, Donald J Schneider Challenge Run; in addition to having the flexibility to have the use permitted year round. The table below summarizes some of the impacts related to the conditional use request.

Conditional Use Review Form	Yes	No	NA
Will the proposed use be compatible with the surrounding area?	X		
Will the proposed building be architecturally compatible with those in the surrounding area?			X
Will the condition create a:			
1. Noise problem		X	
2. Traffic problem		X	
3. Parking problem		X	
4. Highway Access problem		X	
5. Garbage disposal problem		X	
6. Policy and Fire protection problem		X	
7. Be hazardous to children		X	
8. Lighting problem		X	
9. Sewage disposal problem		X	
10. Water supply problem		X	
11. Runoff or drainage problems		X	
12. Windblown articles		X	
13. Water pollution		X	
14. Air pollution		X	
15. Wind erosion		X	
Would the new use of the property have an adverse effect on population densities?		X	
Would the property insurance rates increase for adjoining owners?		X	
Would the granting of the conditional use be detrimental to the environment?		X	
Would the proposed use add or create a floodplain problem?		X	
Would prime agricultural land be destroyed if approved?		X	
Will this use have an adverse effect on a school district?		X	
Will this change decrease adjacent property values?		X	
Will the use add to the economic growth of the labor and industry of Brown County?		X	
Is the conditional use primarily for a speculative income return?		X	

Recommendation:

Staff recommends approval of the conditional use with the following recommendations:

1. That the location of the food trucks be limited to:
    a. Any and all College-owned parking lots, including the Donald J. Schneider Stadium, Mel Nicks parking lots,
    b. Any and all other internal campus green spaces, driveways, walkways/sidewalks, provided that the areas are not city right of way. Should city ordinance change to allow food trucks on city right of way, then food trucks would be allowed within those rights of way as well.
    c. Any and all College-owned roadways.
2. That the location of each food truck ensure safe accessible emergency access.
3. Each vendor/food truck would need a valid license to operate.
4. The conditional use shall be forwarded to City Council for action.

Attachment: PC_Staff_July27_CU (3741 : SNC CU)

	CITY OF DE PERE **APPLICATION FOR CONDITIONAL USE**	**Fee:** $ 275.00 **Receipt #:** **Date:**

Read all instructions provided before completing. If additional space is needed, attach additional pages. Type or use black ink.

SECTION 1: Applicant / Permittee Information

Applicant Name (Ind., Org. or Entity) Saint Norbert College	Authorized Representative Eileen Jahnke	Title Vice President Finance	
Mailing Address 100 Grant St	City De Pere	State WI	ZIP Code 54115
Email Address Eileen M. Jahnke (eileen.jahnke@snc.edu)	Phone Number (incl. area code) 920-403-3250	Fax Number (incl. area code)	

SECTION 2: Landowner Information (complete these fields when project site owner is different than applicant)

Name (Ind. Org. or Entity)	Contact Person	Title	
Mailing Address	City	State	ZIP Code
Email Address	Phone Number (incl. area code)	Fax Number (incl. area code)	

SECTION 3: Project or Site Location

Project Address/Description SNC Campus	Parcel No. On Campus (see description)

SECTION 4: Proposed Conditional Use

Existing Zoning:	R-2, Single Two Family Residence
Present Use of Parcel:	SNC Campus
Proposed Use of Parcel:	SNC Campus. We want to allow for food trucks for SNC Day. Please see attached description.
Present Use of Adjacent Properties:	SNC Campus.

SECTION 5: Certification and Permission

Certification: I hereby certify that I am the owner or authorized representative of the owner of the property which is the subject of this Permit Application. I certify that the information contained in this form and attachments is true and accurate. I certify that the project will be in compliance with all permit conditions. I understand that failure to comply with any or all of the provisions of the permit may result in permit revocation and a fine and/or forfeiture under the provisions of applicable laws.

Permission: I hereby give the City permission to enter and inspect the property at reasonable times, to evaluate this notice and application, and to determine compliance with any resulting permit coverage.

Name of Owner/Authorized Representative (please print) Eileen Jahnke	Title Vice President Finance	Phone Number 920-403-3250
Signature of Applicant 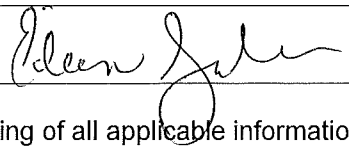		Date Signed July 8,2015

A plan consisting of all applicable information listed on the attached shall be submitted with this application.

TO BE COMPLETED BY CITY STAFF

A Conditional Use Permit is authorized by the De Pere Zoning Code, Section(s):	

Attachment: SNC CU_Food Truck (3741 : SNC CU)

Attachment
Conditional Use Application
Food Trucks on SNC Campus

This Attachment is to become part of the Conditional Use Application for use of food trucks on SNC Special Event Days.

SNC would like to allow for food truck services on the Campus grounds. The primary focus would be during times when the Campus has special events such as, but not limited to, SNC Day, Homecoming, Fourth of July Firecracker Run, Donald J Schneider Challenge Run. However, we would like to have the flexibility to have the use permitted year round. Since the services would be provided on SNC grounds, we would control when the services would be provided. We would limit the use of the food truck services to the following areas on campus:

- Any and all College own parking lots, including the Donald J. Schneider Stadium, Mel-Nicks parking lots (*see attached parking lot map*).
- Any and all other internal campus green spaces , driveways, walkways/sidewalks.
- Any and all College-owned roadways.

We do understand the food truck services would still need to comply with required ordinances for emergency access and serving food. We further understand that it is our responsibility to work with the potential vendors to make sure they are properly licensed.

Attachment: SNC CU_Food Truck (3741 : SNC CU)

St. Norbert College Parking Map

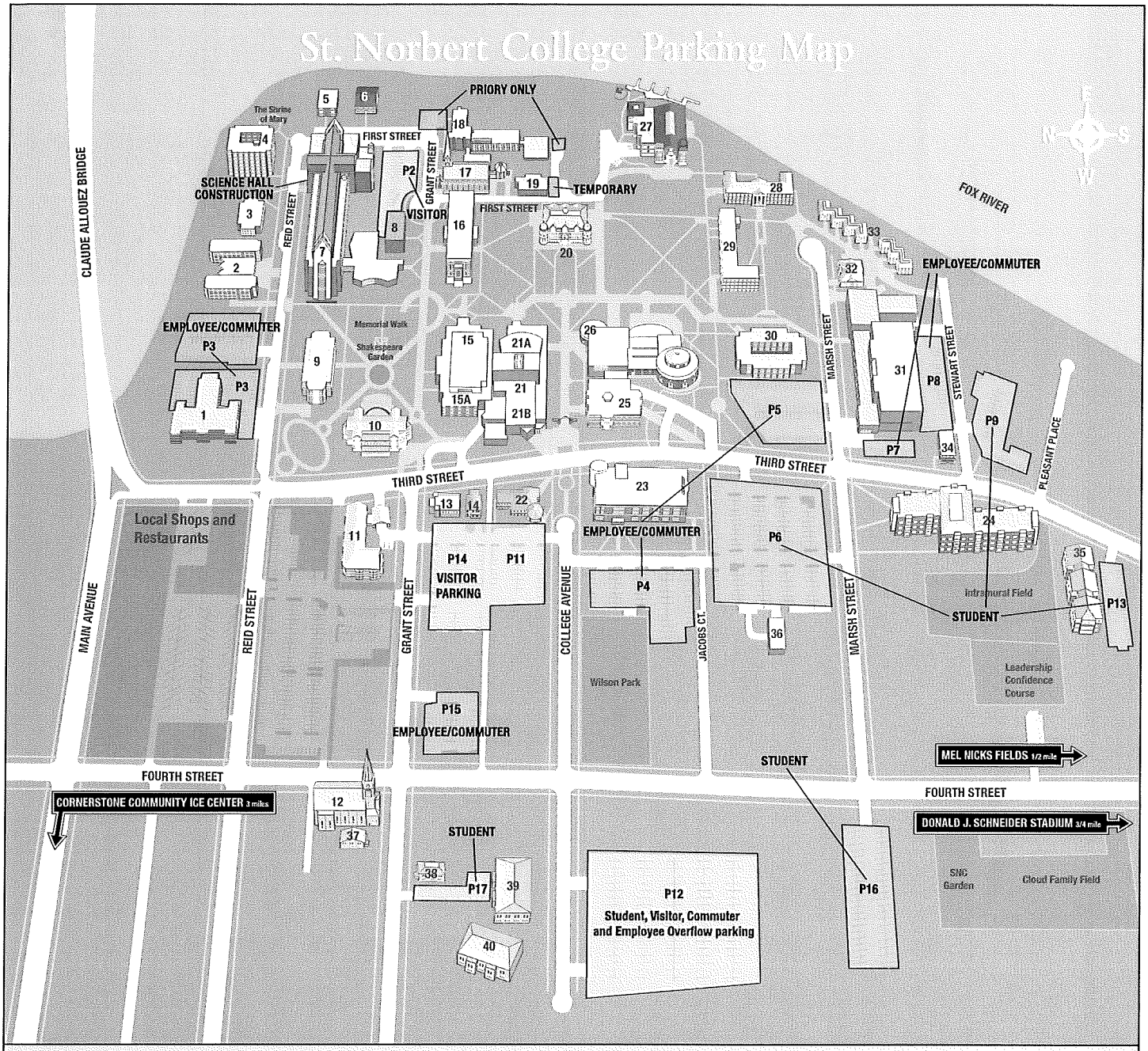

Parking Index

P1	Student	P5	Employee/Commuter	P9	Student	P14	Visitor
P2	Visitor	P6	Student	P11	Visitor	P15	Employee/Commuter
P3	Employee/Commuter	P7	Employee/Commuter	P12	Visitor, Student, Employee, Overflow	P16	Student
P4	Employee/Commuter	P8	Employee/Commuter	P13	Student	P17	Student

Building Numerical Index

1 Pennings Activity Center *(PAC)*
2 Madelaine and Lorraine Residence Halls *(Mad-Lor Halls)*
3 Gertrude S. Bergstrom Residence Hall *(Bergstrom Hall)*
4 Mary Minahan McCormick Residence Hall *(MMM Hall)*
5 John J. Vander Zanden Residence Hall *(Vander Zanden Hall)*
6 Riverside South Residence Hall *(Riverside South Hall)*
7 Dr. John R. Minahan Science Hall *(JMS)*
8 St. Joseph Hall
9 Austin E. Cofrin Hall *(Cofrin Hall)*
10 F. K. Bemis International Conference Center *(Bemis Center)*
11 George F. Kress Residence for Executive Education *(Kress Inn)*
12 Dudley Birder Hall *(Birder Hall)*
13 Cassandra Voss Center
14 Rev. Ignatius Francis Van Dyke, O.Praem., Alumni House *(Alumni House)*
15 Todd Wehr Hall
15A Bookstore
16 Francis H. Boyle Hall *(Boyle Hall)*
17 Old St. Joseph Church
18 St. Joseph Priory
19 Heating Plant
20 Main Hall
21 Abbot Pennings Hall of Fine Arts
21A Walter Theatre
21B Webb Theatre
22 Ariens Family Welcome Center
23 The Miriam B. and James J. Mulva Library *(Mulva Library)*
24 Fr. Eugene E. Gries, O.Praem., Hall *(Gries Hall)*
25 Carol and Robert Bush Art Center *(Bush Art Center)*
26 Michels Commons
27 Ray Van Den Heuvel Family Campus Center *(Campus Center)*
28 Dennis M. Burke Hall *(Burke Hall)*
29 Frank J. Sensenbrenner Residence Hall *(Sensenbrenner Hall)*
30 Victor McCormick Hall *(VMC)*
31 Schuldes Sports Center
32 Ralph and Catherine Paulson Carriage House *(Carriage House)*
33 Thomas and Maureen Manion Townhouse Village *(Townhouse Village)*
34 Human Resources
35 Dale and Ruth Michels Hall *(Michels Hall)*
36 Grounds Facility
37 Rectory
38 Convent

P1 to P16 Parking lots

Attachment: SNC CU_Food Truck (3741 : SNC CU)

City of De Pere, Wisconsin

Request For Plan Commission Action

MEETING DATE:	**July 27, 2015**
DEPARTMENT:	**Planning**
FROM:	**Sarah Wallace**
SUBJECT:	**Review the Site Plan application for a 4,803 sq.ft. addition to Cyntrx, parcel ED-F0081-3 (2080 Profit Place). Application: Smet Investments LLC.**

ATTACHMENTS:

- PC_Staff_July27_SP (PDF)
- Cyntrex_application (PDF)
- Cyntrex site paln submittal dwgs (PDF)
- Cyntrex existing photo (JPG)

Item 5: **Review the Site Plan application for a 4,803 sq ft addition to Cyntrx, parcel ED-F0081-3 (2080 Profit Place). Applicant: Smet Investments LLC.**

Figure 1. Image of existing site.

Overview:
Smet Investments LLC owns the current building located in East Side Industrial Park, and zoned I-1. Smet Investment leases the space to Cyntrx. They are requesting the following modifications:

1. Addition on the east side of the building which would allow for the expansion of Cyntrx.
2. Addition on the northeast side for parking, which will provide an additional 9 new parking spaces.
3. Addition of a patio on the south side of the new addition.

Public Works:

1. Correct plans to list the property address as 2080 Profit Place.
2. Show dimensions of all property boundary lines on the plans.
3. List floor area ratio on plan.
4. The downspouts are connected to an 8" diameter pipe that is extended to the pond. Provide an end wall for this pipe and show the elevation on the plan. Verify that rip rap or other erosion control is not needed.
5. The drainage and grading plan shows a swale extending into the adjacent City owned parcel where the detention pond is located. The detention pond plans shows a water surface elevation of 630.84 and a top of bank elevation of 634.84 (converted to NAVD'88). Complete grading to match the existing elevations and no lower than elevation 634.84. Show existing storm sewer laterals serving this property on the plan.
6. Show and label erosion control on the erosion control plan. Grading and restoration should not extend onto the City owned property that contains the regional detention pond.

Attachment: PC_Staff_July27_SP (3740 : Cyntrx Site Plan)

7. There are no new water mains or sanitary sewer main connections for this addition.
8. The existing driveway apron is shown on the plan as asphalt. Future replacement should be with concrete per Section 22-15(c)(1).

Fire:
1. No comments at this time until final plans are submitted.

Forestry:
1. Landscape is in conformance.

Building/Planning:
1. The Site Plan indicates that the property is zoned IB2, Industrial Business 2, when the zoning for this property is I-1, Industrial Development, correct on plans.
2. The elevations and material used will match the existing building in order to meet the code requirements.
3. Lighting for the plan needs to be no more than one foot candle at the property line
4. The plans need to be approved by the State before permits can be issued.

Recommendation
Staff would recommend approval of the site plan with the following items identified above being addressed.

Attachment: PC_Staff_July27_SP (3740 : Cyntrx Site Plan)

Attachment: Cyntrex_application (3740 : Cyntrx Site Plan)

CITY OF DE PERE

APPLICATION FOR SITE PLAN REVIEW

Fee: $ 245.00

Receipt #: _____

Date: 7/13/15

Please print or type using black ink for duplicating purposes.

A. Property Owner: Name: Smet Investments LLC

Mailing Address: 1800 O KEEFE RD STE C De Pere Wi 54115

Phone: (920) 532-3828

Email: SSmet@smet.com

I hereby appoint the following as my agent for purposes of this application:

Agent: Name: Richard J. Fisher AIA

Mailing Address: 916 Cedar Street

Phone: 920-376-0007

Email: rfisher@fisherandassocaiatesllc.com

B. Property Information

Address/Location of Property: 2098 PROFIT PlACE Parcel #: ED-F0081-3

Parcel Dimension: irregular Parcel Area: 64,101

Legal Description: _____

A Site Plan Review is requested as authorized by the De Pere Zoning Code, Section(s): Article XIII, Section14.60.

Scott R Smet

Owner Signature

07/10/15

Date

Agent Signature

7/13/15

Date

A plan consisting of all applicable information listed on the attached shall be submitted with this application. An AutoCAD drawing matching the state approved plans must be submitted in Brown County Coordinates before permits can be issued.

PROPOSED BUILDING ADDITION FOR:
CYNTRX
2098 PROFIT PLACE
DE PERE, WI

SHEET INDEX

ARCHITECTURAL / CIVIL

TS - TITLE SHEET
G1.1 - GENERAL INFORMATION
C1.0 - SITE PLAN
1.0 - EXISTING SITE TOPO
1.2 - DRAINAGE AND GRADING
1.3 - EROSION CONTROL
2.1 - CONSTRUCTION DETAILS
L1.0 - LANDSCAPE PLAN
A1.0 - EXISTING FLOOR PLAN
A1.1 - FLOOR PLAN
A3.1 - EXTERIOR ELEVATIONS

PROJECT INFORMATION

ADDRESS: CYNTRX
2098 PROFIT PLACE
DE PERE, WI

OWNER: SMET INVESTMENTS LLC
800 OKEEFE ROAD
DEPERE WI 54115

CONTACT: SCOTT SMET
920-532-3828

DESIGNERS OF RECORD:

ARCHITECT: FISHER & ASSOCIATES
ARCHITECTS / PLANNERS
215 PETERLYNN DRIVE
WRIGHTSTOWN, WISCONSIN 54180
P.(920) 532-4199
F.(920) 532-4198
RFISHER@FISHERANDASSOCIATESLLC.COM

CONTACT: RICHARD J. FISHER AIA

STRUCTURAL ENGINEERS:
LARSON ENGINEERING OF WISCONSIN
2801 EAST ENTERPRISE DRIVE
APPLETON, WISCONSIN 54915
P.(920) 734-9867
F.(920) 734-9880

CONTACT: BRIAN ENDTER
BENDTER@LARSONENGR.COM

CONSTRUCTION MANAGER:
SMET CONSTRUCTION SERVICES
300 N. BROADWAY SUITE 2B
GREEN BAY, WI 54302
P.(920) 532-3828
F.(920) 532-3831

BUILDING CODE ANALYSIS

INTERNATIONAL EXISTING BUILDING CODE 2009

OCCUPANCY: B, & S1 (NON-SEPERATED)
TYPE OF CONSTRUCTION: VB (WOOD FRAMED UNPROTECTED)
NON - SPRINKLERED

OCCUPANT LOAD:
69 OCCUPANTS PER FLOOR
THIS FACILITY WILL EMPLOY 44 PERSONS

EGRESS WIDTH REQUIRED
.2"/ OCCUPANT

69 X .2 = 14" REQUIRED

EXIT ACCESS TRAVEL DISTANCE
250' PER TABLE 1004.2.4

TOILET FACILITIES PER TABLE 2902.1
MENS 25

25/25 = 1.0 W.C.	25/40 = 1 LAV.
1.0 W.C. REQUIRED	.63 LAV. REQUIRED

UP TO 50% OF TOILETS MAY BE URINALS
2 W.C., 2 U & 2 LAVS. PROVIDED

WOMENS 25

25/25 = 1.0 W.C.	25/40 = 1 LAV.
1.0 W.C. REQUIRED	.63 LAV. REQUIRED

2 W.C. & 2 LAVS. PROVIDED

2 UTILITY SINKS PROVIDED

ALLOWABLE AREA PER FLOOR

B AND S1 NON-SEPARATED
6,000 PER TABLE 503 (AREA INCREASE NOT CALCULATED)
6,000 + (6000X.75) = 10,500 S.F. ALLOWABLE

BUILDING AREA

EXISTING BUILDING	3,240 S.F.
ADDITION	4,803 S.F.
PROJECT AREA	5,000 S.F.

FIRE FIGHTING APPARATUS

THE BUILDING IS LIMITED IN AREA
THE FIRE LANE IS UNOBSTRUCTED
THE FIRE LANE IS WITH IN 150 ' OF ALL PARTS OF THE EXTERIOR WALL
THE BUILDING IS 18-0" TALL
WITH A MIN. UNOBSTRUCTED HEIGHT OF 13'-6"

CONTROL AREAS

NO HAZARDOUS MATERIALS WILL BE STORED WITHIN THIS BUILDING
PER TABLES 307.7(1) AND 307.7 (2)

GRADE PLAN DETERMINATION

THE GREATEST HGT. FROM GRADE TO TOP OF WALL IS 26'-6"
ALLOWABLE HEIGHT PER TABLE 503 IS 40'

NUMBER OF STORIES (1)

THIS BUILDING HAS ONE FLOOR LEVELS

SITE PLAN SUBMITTAL **7/13/15**

SMET
CONSTRUCTION SERVICES
OUR REPUTATION IS BUILDING

CORPORATE OFFICE
300 N. BROADWAY, SUITE 2B
GREEN BAY, WI 54303
(800) 275-1672
(920) 532-3828
FAX (920) 532-3831
E-MAIL BUILD@SMET.COM

MARINETTE OFFICE
1428 MAIN STREET, SUITE D
MARINETTE, WI 54143
WWW.SMET.COM

SMET CONSTRUCTION SERVICES CORP◆ DESIGN/BUILD/FINANCE

COPYRIGHT NOTICE:
THIS DRAWING IS THE PROPERTY OF C.S. SMET CONSTRUCTION CORP. AND IS SUPPLIED FOR THE SOLE PURPOSE OF COMMUNICATING OUR OFFER FOR YOUR EVALUATION AND CONSIDERATION. YOU MAY NOT COPY IN WHOLE OR IN PART, IS NOT PERMITTED WITHOUT THE EXPRESS WRITTEN CONSENT OF C.S. SMET CONSTRUCTION CORP. WE RESERVE THE RIGHT TO CLOSE DISCUSSIONS WITH YOU AT THEIR RETURN, IN WHOLE, UPON NOTICE. YOUR ACCEPTANCE OF POSSESSION OF THIS PROPOSAL SIGNIFIES YOUR UNDERSTANDING AND ACCEPTANCE OF THIS CONDITION.

REVISIONS:

FISHER & ASSOCIATES, LLC
Architects / Planners
215 PETERLYNN DRIVE WRIGHTSTOWN, WI 54180
PHONE 920.532.4199 FAX 920.532.4198
rfisher@fisherandassociatesllc.com

PROJECT INFO:
PROPOSED BUILDING ADDITION FOR:
CYNTRX
2098 PROFIT PLACE
DE PERE, WI

DRAWN BY: RJF	SALES: SCOTT
SMET NO.: 14207	SHEET: TS
ARCHT. NO.: 14085	
DATE: MAY 12, 2015	

Attachment: Cyntrex site pain submittal dwgs (3740 : Cyntrx Site Plan)

ARCHITECTURAL ABBREVIATIONS

A	A.B.	ANCHOR BOLT
	AC.FLR.	ACCESS FLOOR
	ACOUS.	ACOUSTIC
	ADA	AMERICANS WITH DISABILITIES ACT
	ADD.	ADDENDUM
	ADDL.	ADDITIONAL
	ADJ.	ADJUSTABLE
	ADJ.	ADJACENT
	ADMIN.	ADMINISTRATION
	A.F.F.	ABOVE FINISHED FLOOR
	AHU	AIR HANDLING UNIT
	ALT.	ALTERNATE
	ALUM.	ALUMINUM
	AMEND.	AMENDMENT
	ANNUN.	ANNUNCIATOR
	AP	ACCESS PANEL
	APPROX.	APPROXIMATE
	ARCH.	ARCHITECTURAL
	ATC	ACOUSTIC TILE CEILING
	AUTO.	AUTOMATIC
B	BUL.BD.	BULLETIN BOARD
	BD.	BOARD
	BG	BUMPER GUARD
	BIT.	BITUMINOUS
	BKT.	BRACKET
	BLDG.	BUILDING
	BLKG.	BLOCKING
	BM.	BEAM
	BOT.	BOTTOM
	BRG.	BEARING
	BSMT.	BASEMENT
	BUL.	BULLETIN
C	CAB.	CABINET
	CCTV	CLOSED CIRCUIT TELEVISION
	CD	COILING DOOR
	CEIL.	CEILING
	CG	CORNER GUARD
	CH	COAT HOOK
	C.J.	CONSTRUCTION JOINT
	CLG.	CEILING
	CLR.	CLEAR
	CM	CONSTRUCTION MANAGER
	CMU	CONCRETE MASONRY UNITS
	CO	CLEAN-OUT
	COL.	COLUMN
	COMB.	COMBINATION
	CONC.	CONCRETE
	CONF.	CONFERENCE
	CONN.	CONNECTION
	CONST.	CONSTRUCTION
	CONT.	CONTINUOUS
	CONTR.	CONTRACTOR
	COORD.	COORDINATE
	CORR.	CORRIDOR
	CPT.	CARPET
	CT	CERAMIC TILE
	CTR.	CENTER
	CTSK.	COUNTERSINK
	CUH	CABINET UNIT HEATER
	CW	COLD WATER
	CYL.	CYLINDER
D	DEMO.	DEMOLITION
	DEPR.	DEPRESSION
	DEPT.	DEPARTMENT
	DTLS.	DETAILS
	DF	DRINKING FOUNTAIN
	DIA.	DIAMETER
	DIAG.	DIAGONAL
	DIFF.	DIFFUSER
	DIM.	DIMENSION
	DISP.	DISPENSER
	DIST.	DISTRIBUTION
	DIV.	DIVISION
	DN	DOWN
	DP.	DEEP
	DR.	DOOR
	DR.	DRIVE
	DS	DOWNSPOUT
	DW	DISHWASHER
	DWG.	DRAWING
	DWLS.	DOWELS
E	E	ELECTRIC
	EA	EXHAUST-AIR
	EA.	EACH
	EC	ELECTRICAL CABINET
	EF	EXHAUST FAN
	EL.	ELEVATOR
	ELEC.	ELECTRICAL
	ELEV.	ELEVATION
	EMERG.	EMERGENCY
	ENCL.	ENCLOSURE
	ENTR.	ENTRANCE
	EO	ELECTRICAL OUTLET
	EP	ELECTRIC PANEL
	EQ.	EQUAL
	EQUIP.	EQUIPMENT
	EWC	ELECTRIC WATER COOLER
	EX.	EXISTING
	EXC.	EXCAVATE
	EXH.	EXHAUST
	EXIST.	EXISTING
	EXP.	EXPANSION
	EXT.	EXTERIOR
F	FA	FIRE ALARM
	FB	FIRE BLANKET
	FD	FIRE DAMPER
	FD	FLOOR DRAIN
	FDN.	FOUNDATION
	FE	FIRE EXTINGUISHER
	FEC	FIRE EXTINGUISHER CABINET
	FH	FIRE HOSE
	FHC	FIRE HOSE CABINET
	FIN.	FINISH
	FIXT.	FIXTURE
	FLR.	FLOOR
	FLASH.	FLASHING
	FLEX.	FLEXIBLE
	FLG.	FLANGE
	FLUOR.	FLUORESCENT
	FM	FACTORY MUTUAL
	FP	FIREPROOF
	FRMG.	FRAMING
	FS	FLOOR SINK
	FT.	FOOT/FEET
	FTG.	FOOTING
	FTN.	FOUNTAIN
	FUT.	FUTURE
G	G	GAS
	GA.	GAUGE
	GALV.	GALVANIZED
	GB	GRAB BAR
	GBC	GENERAL BUILDING CONTRACTOR
	GEN.	GENERAL
	GENER.	GENERATOR
	GL.	GLASS
	GR.	GRADE
	GYP.	GYPSUM
H	H.	HIGH
	HB	HOSE BIBB
	HD	HAND DRYER
	HDCP.	HANDICAP
	HDR.	HEADER
	HDWD.	HARDWOOD
	HDWR.	HARDWARE
	HGT.	HEIGHT
	HM	HOLLOW METAL
	HORIZ.	HORIZONTAL
	HTR.	HEATER
	HVAC	HEATING VENTILATING AIR-CONDITIONING
	HW	HOT WATER
I	I.D.	INSIDE DIAMETER
	IN.	INCH
	INSUL.	INSULATION
	INT.	INTERIOR
	ISO.	ISOLATION
J	JAN.	JANITOR
	JB	JUNCTION BOX
	JST.	JOIST
	JT.	JOINT
K	KO	KNOCK OUT
	KS	KNEE SPACE
	KW	KILOWATT
L	L.	LAVATORY
	LAM.	LAMINATE
	LAV.	LAVATORY
	LB.	POUND
	LIN.	LINEAR
	LKR.	LOCKER
	LL	LEAD LINED
	LLH	LONG LEG HORIZONTAL
	LLV	LONG LEG VERTICAL
	LP	LIGHT POLE
	LVR.	LOUVER
M	MAN.	MANUAL
	MATL.	MATERIAL
	MAX.	MAXIMUM
	MECH.	MECHANICAL
	MEMB.	MEMBRANE
	MTL.	METAL
	MEZZ.	MEZZANINE
	MFG.	MANUFACTURING
	MFR.	MANUFACTURER
	MH	MANHOLE
	MIN.	MINIMUM
	MIR.	MIRROR
	MISC.	MISCELLANEOUS
	M.O.	MASONRY OPENING
	MTD.	MOUNTED
N	N/A	NOT APPLICABLE
	NEC	NATIONAL ELECTRIC CODE
	NIC	NOT IN CONTRACT
	NO.	NUMBER
	NOM.	NOMINAL
	NRC	NOISR REDUCTION COEFFICIENT
	NTS	NOT TO SCALE
O	O.C.	ON CENTER
	O.D.	OUTSIDE DIAMETER
	OFF.	OFFICE
	OH.	OVERHEAD
	OPER.	OPERATOR
	OPNG.	OPENING
	OPP.	OPPOSITE
	ORD	OVERFLOW ROOF DRAIN
P	PART.	PARTITION
	PB	PASS BOX
	PC	PRECAST
	PD	PENCIL DRAWER
	PH	PANIC HARDWARE
	PL.	PLATE
	PLAM.	PLASTIC LAMINATE
	PLAS.	PLASTIC
	PLAST.	PLASTER
	PLMB.	PLUMBING
	PLWD.	PLYWOOD
	PNL.	PANEL
	PR.	PAIR
	PRELIM.	PRELIMINARY
	PRV	POWER ROOF VENTILATOR
	PTN.	PARTITION
	PVC	POLYVINYL CHLORIDE
Q	QT	QUARRY TILE
R	R	RADIUS
	R.	RISER
	RA	RETURN-AIR
	RD	ROOF DRAIN
	REBAR	REINFORCING ROD
	REC.	RECESSED
	REF.	REFERENCE
	REFRIG.	REFRIGERATOR
	REINF.	REINFORCING
	REQD.	REQUIRED
	RET.	RETAINING
	REV.	REVISION
	RH	ROOF HATCH
	RM.	ROOM
	RO	ROUGH OPENING
	R&S	ROD AND SHELF
S	S.	SINK
	SCHED.	SCHEDULE
	SD	SMOKE DAMPER
	SECT.	SECTION
	SF	SQUARE FOOT/FEET
	SH.	SHELF
	SHR.	SHOWER
	SHT.	SHEET
	SHTG.	SHEATHING
	SIM.	SIMILAR
	SPEC.	SPECIFICATION
	SQ.	SQUARE
	SS	STAINLESS STEEL
	SS	STORM SEWER
	ST.	STAINLESS
	ST.	STREET
	STD.	STANDARD
	STL.	STEEL
	STOR.	STORAGE
	STRUCT.	STRUCTURAL
	STWD.	SOFTWOOD
	SUPV.	SUPERVISOR
	SUSP.	SUSPENDED
	SW.	SWITCH
T	T	TOILET
	T.	TREAD
	TAN.	TANGENT
	TC	TIME CLOCK
	TEL.	TELEPHONE
	TEMP.	TEMPERED
	TEMP.	TEMPERATURE
	TERR.	TERRAZZO
	T&G	TONGUE AND GROOVE
	THRES.	THRESHOLD
	TLT.	TOILET
	TRANS.	TRANSFORMER
	TS	TUBE STEEL
	TV	TELEVISION
	TYP.	TYPICAL
U	UC	UNDERCUT
	UCR	UNDERCOUNTER REFRIGERATOR
	UL	UNDERWRITERS LABORATORIES
	UNFIN.	UNFINISHED
	UNO	UNLESS NOTED OTHERWISE
	UR.	URINAL
	UTIL.	UTILITY
V	V	VENT
	VCT	VINYL COMPOSITION TILE
	VENT.	VENTILATION
	VERT.	VERTICAL
	VEST.	VESTIBULE
	VNL.	VINYL
	VTR	VENT THROUGH ROOF
	VWC	VINYL WALL COVERING
W	W.	WIDE
	W/	WITH
	W/O	WITHOUT
	WC	WATER CLOSET
	WD.	WOOD
	WDW.	WINDOW
	WF	WIDE FLANGE
	WGT.	WEIGHT
	W.H.	WATER HEATER
	WHCR.	WHEELCHAIR
	WP	WATERPROOF
	WS	WEATHERSTRIP
	WSCT.	WAINSCOT
	W.W.F.	WELDED WIRE MESH
X	XFMR.	TRANSFORMER
Y	YD.	YARD
	<	ANGLE
	@	AT
	CL	CENTER LINE
	[	CHANNEL

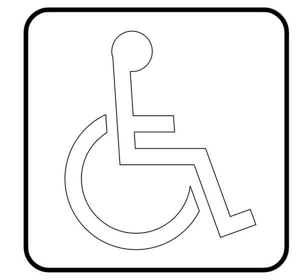

INTERNATIONAL SYMBOL OF ACCESSIBILITY

IT SHALL BE THE RESPONSIBILITY OF THE OWNER TO INSTALL (WHERE SHOWN HEREON), BARRIER FREE PARKING SIGNS IN CONFORMITY TO WISCONSIN ADMINISTRATIVE CODE: TRANS #200.07

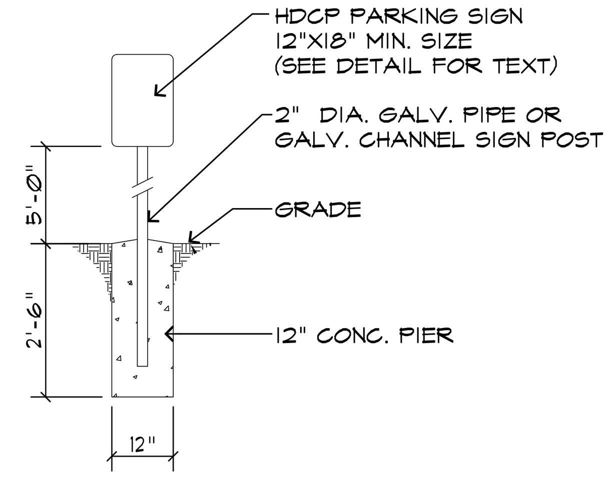

SIGN POST DETAIL

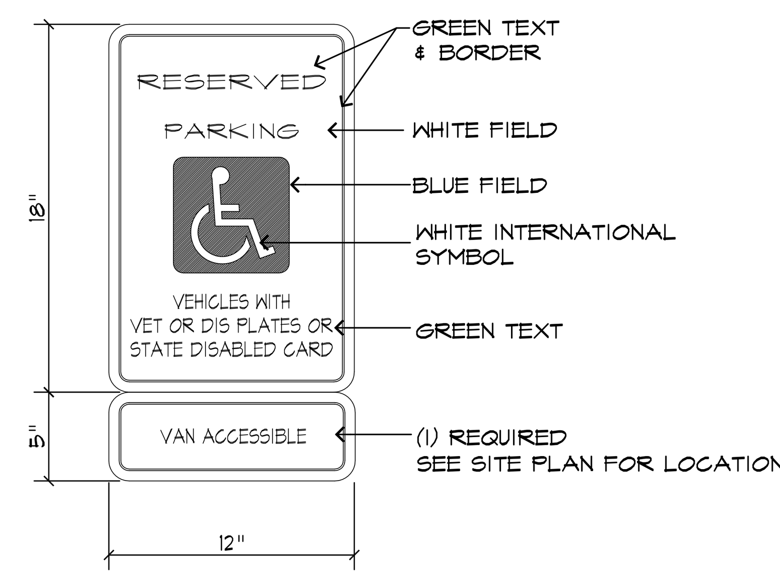

PARKING SIGN DETAIL

HANDICAPPED PARKING SIGN DETAILS

NOT TO SCALE

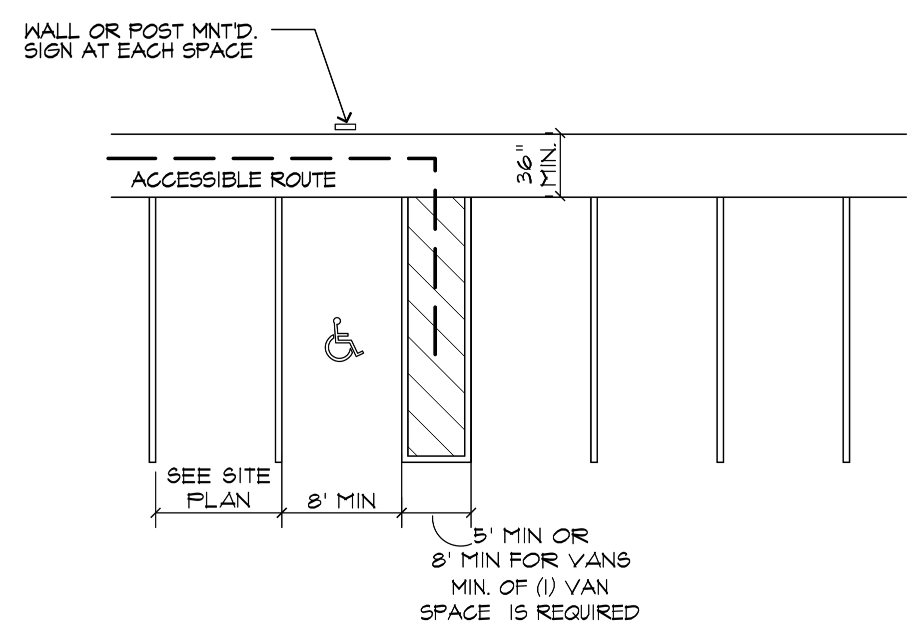

HANDICAPPED PARKING SPACES

THE MAXIMUM SLOPE AT PARKING SPACES IS 1:50 (4.6.2)

405.1 GENERAL.
ANY PART OF AN ACCESSIBLE ROUTE WITH A SLOPE GREATER THAN 1:20 SHALL BE CONSIDERED A RAMP AND SHALL COMPLY WITH 405.

SLOPE AND RISE.
THE LEAST POSSIBLE SLOPE SHALL BE USED FOR ANY RAMP. THE MAXIMUM SLOPE OF A RAMP IN NEW CONSTRUCTION SHALL BE 1:12. THE MAXIMUM RISE FOR ANY RUN SHALL BE 30 IN.(760MM) (SEE FIG. 16,). CURB RAMPS AND RAMPS TO BE CONSTRUCTED ON EXISTING SITES OR IN EXISTING BUILDINGS OF FACILITIES MUST HAVE SLOPES AND RISES AS ALLOWED IN 405.2 IF SPACE LIMITATIONS PROHIBIT THE USE OF A 1:12 SLOPE OR LESS.

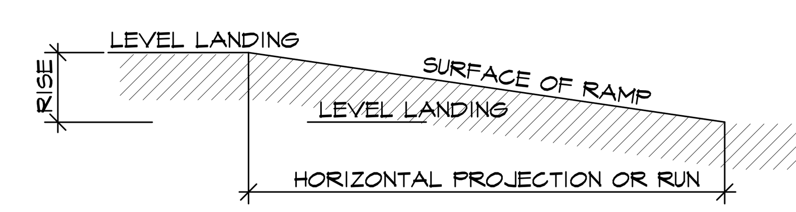

SLOPE	MAXIMUM RISE IN.	MAXIMUM HORIZONTAL PROJECTION FT.
1:12 TO 1:16	30	30
1:16 TO 1:20	30	40

SINGLE RAMP RUN

NO SCALE

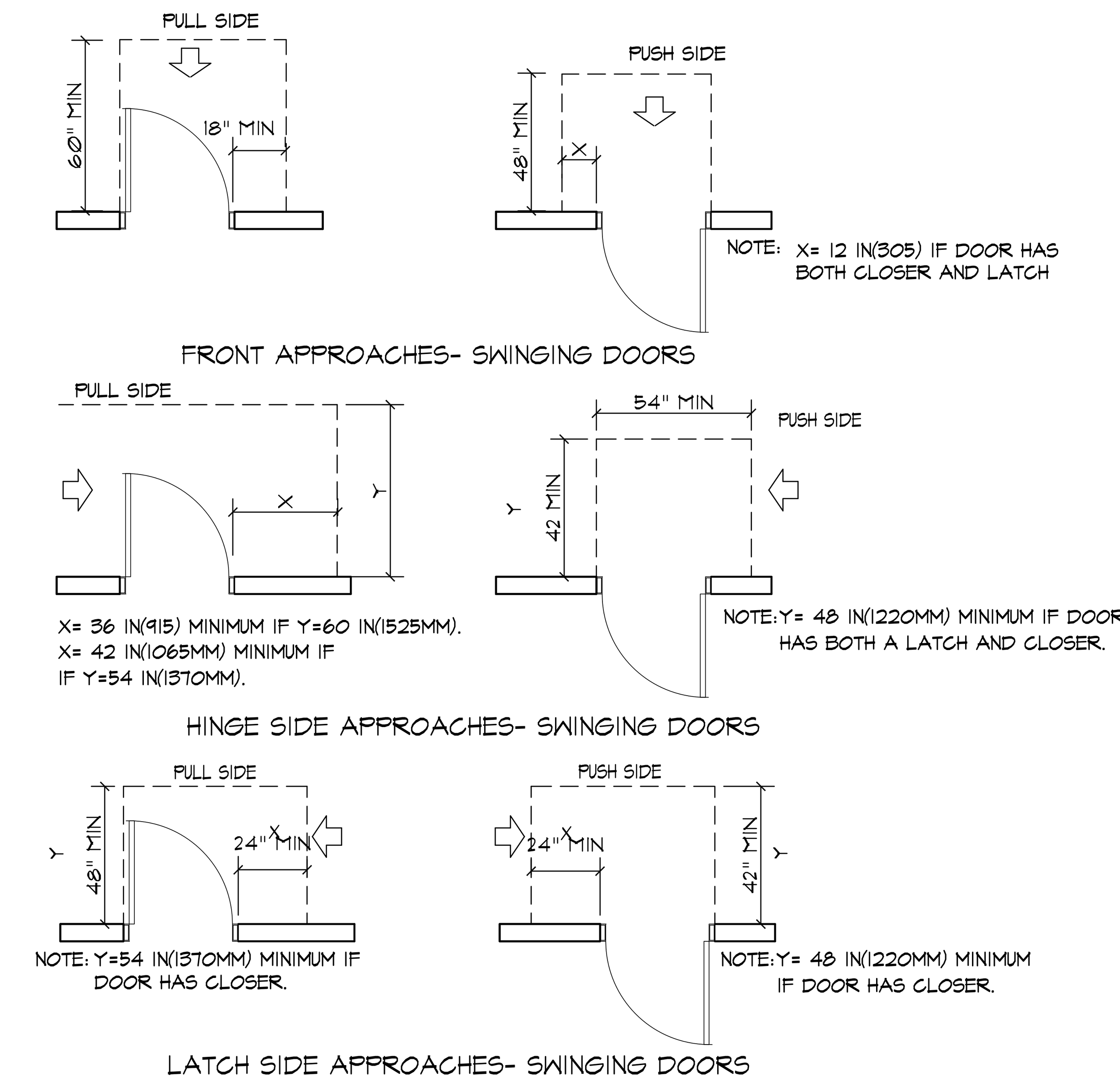

NOTE: ALL DOORS IN ALCOVES SHALL COMPLY WITH THE CLEARANCE FOR FRONT APPROACHES

MANEUVERING CLEARANCES AT DOORS

NO SCALE

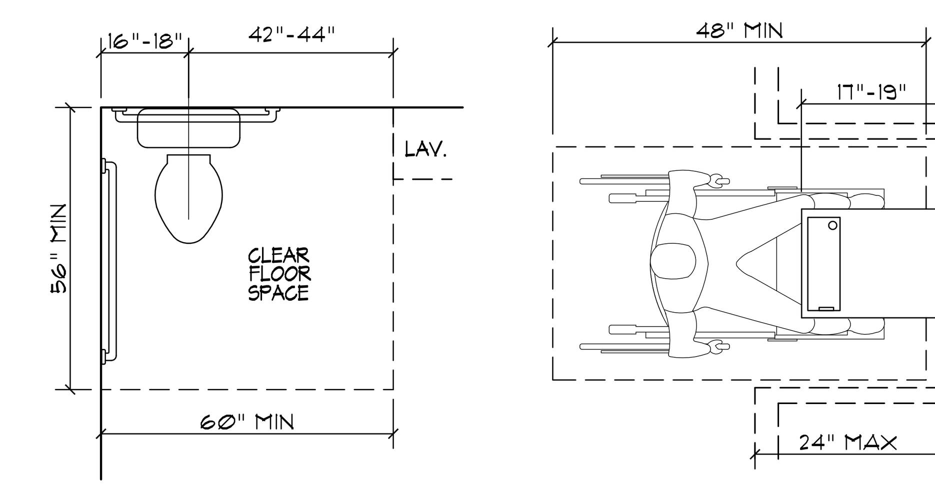

CLEAR FLOOR SPACE AT WATER CLOSET

CLEAR FLOOR SPACE

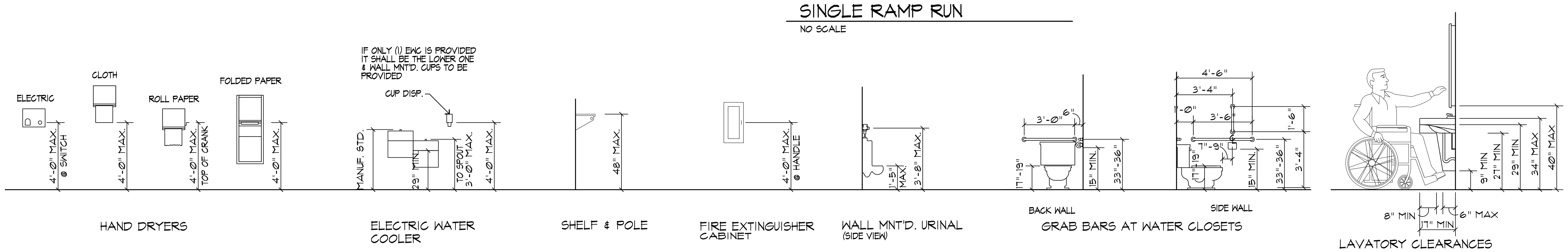

TOILET & BUILDING ACCESSORY MOUNTING HEIGHTS & CLEARANCES

NOT TO SCALE

SMET CONSTRUCTION SERVICES
OUR REPUTATION IS BUILDING
WWW.SMET.COM
SMET CONSTRUCTION SERVICES CORP• DESIGN/BUILD/FINANCE
(800) 275-1872
(920) 532-3828
FAX (920) 532-3831
E-MAIL BUILD@SMET.COM
CORPORATE OFFICE
300 N. BROADWAY, SUITE 2B
GREEN BAY, WI 54303
MARINETTE OFFICE
1428 MAIN STREET, SUITE D
MARINETTE, WI 54143

COPYRIGHT NOTICE:
THIS DRAWING IS THE PROPERTY OF C.S. SMET CONSTRUCTION CORP. AND IS SUPPLIED FOR THE SOLE PURPOSE OF COMMUNICATING OUR OFFER FOR YOUR EVALUATION AND CONSIDERATION. REPRODUCTION IN WHOLE, OR IN PART, IS NOT PERMITTED WITHOUT THE EXPRESS WRITTEN CONSENT OF C.S. SMET CONSTRUCTION CORP. WE RESERVE THE RIGHT, AT OUR SOLE DISCRETION, TO REQUEST THEIR RETURN, IN WHOLE, UPON NOTICE. YOUR ACCEPTANCE OF POSSESSION OF THIS PROPOSAL SIGNIFIES YOUR UNDERSTANDING AND ACCEPTANCE OF THIS CONDITION.

REVISIONS:

FISHER & ASSOCIATES, LLC
Architects / Planners
215 PETERLYNN DRIVE WRIGHTSTOWN, WI 54180
Ph.(920) 532-4199 Fax (920) 532-4119
rfisher@fisherandassociatesllc.com

PROJECT INFO:
PROPOSED BUILDING ADDITION FOR:
CYNTRX
2098 PROFIT PLACE
DE PERE, WI

DRAWN BY: RJF	SALES: SCOTT
SMET NO.: 14207	SHEET: G1.1
ARCHT. NO.: 14085	
DATE: MAY 12, 2015	

Attachment: Cyntrex site paln submittal dwgs (3740 : Cyntrx Site Plan)

ZONING REQUIREMENTS

ZONING DISTRICT: IB2 INDUSTRIAL BUSSINESS 2
SETBACKS: 40'-0" FRONT AND 25'-0" SIDES AND 25'-0" REAR

OFF STREET PARKING REQUIREMENTS
(4) SPACE /1000 S.F.
8,043 S.F. / 1000 = 32 SPACES REQUIRED
SPACES PROVIDED 36

LOT AREA	62,101 S.F.	
BUILDING AND CANOPIES	8,043 S.F.	13%
GREEN SPACE	32,764 S.F.	52%
PAVEMENT AND SIDEWALKS		
EXISTING PAVING	15,023	
EXISTING WALKWAYS	1612	
NEW PAVING	3,717	
NEW WALKWAYS	942	
PAVEMENT AND SIDEWALKS	21,294 S.F.	35%

SITE PLAN
1" = 20'-0"

SMET CONSTRUCTION SERVICES
CONSTRUCTION SERVICES
OUR REPUTATION IS BUILDING
DESIGN/BUILD/FINANCE
WWW.SMET.COM
E-MAIL BUILD@SMET.COM
FAX (920) 532-3851
(800) 275-1672
(920) 532-3828

CORPORATE OFFICE
300 N. BROADWAY, SUITE 2B
GREEN BAY, WI 54303

MARINETTE OFFICE
1428 MAIN STREET, SUITE D
MARINETTE, WI 54143

COPYRIGHT NOTICE:
THIS DRAWING IS THE PROPERTY OF C.S. SMET CONSTRUCTION CORP. AND IS SUPPLIED FOR THE SOLE PURPOSE OF COMMUNICATING OUR OFFER FOR YOUR EVALUATION AND CONSIDERATION. IT MAY NOT BE USED, IN WHOLE OR IN PART, IS NOT PERMITTED WITHOUT THE EXPRESS WRITTEN CONSENT OF C.S. SMET CONSTRUCTION CORP. WE RESERVE THE RIGHT TO COPYRIGHT ALL DESIGNS, TO REQUEST THEIR RETURN, IN WHOLE, UPON NOTICE. YOUR ACCEPTANCE OF POSSESSION OF THIS DRAWING SHALL CONSTITUTE YOUR AGREEMENT AND ACCEPTANCE OF THIS CONDITION.

REVISIONS:

FISHER & ASSOCIATES, LLC
Architects / Planners
25 PERSHTIGN DRIVE, PESHTIGO, WI 54157
PHONE: 715-582-4221 FAX: 715-582-4241
rfisher@fisherandassociatesllc.com

PROJECT INFO:

PROPOSED BUILDING ADDITION FOR: CYNTRX

2098 PROFIT PLACE DE PERE, WI

DRAWN BY: RJF	SALES: SCOTT
SMET NO.: 14207	SHEET: C1.0
ARCHT. NO.: 14085	
DATE: MAY 12, 2015	

Attachment: Cyntrx site paln submittal dwgs (3740 : Cyntrx Site Plan)

Topographic Survey

LEGEND

CATV	Underground Cable TV		Sanitary MH / Tank / Base		CATV Pedestal
FO	Underground Fiber Optic		Clean Out / Curb Stop / Pull Box		Gas Regulator
OH	Overhead Electric Lines		Storm Manhole		Railroad Signal
	Utility Guy Wire		Inlet		Sign
San	Sanitary Sewer		Catch Basin / Yard Drain		Tower / Silo
Sto	Storm Sewer		Water MH / Well		Post / Guard Post
E	Underground Electric		Hydrant		Satellite Dish
G	Underground Gas Line		Utility Valve		Large Rock
T	Underground Telephone		Utility Meter		Flag Pole
W	Water Main		Utility Pole		Deciduous Tree
	Fence - Steel		Light Pole / Signal		Coniferous Tree
	Fence - Wood		Guy Wire		Bush / Hedge
	Fence - Barbed Wire		Electric Pedestal		Stump
WL	Wetlands	E	Electric Transformer		Marsh
	Treeline	A	Air Conditioner		Soil Boring
	Railroad Tracks	T	Telephone Pedestal		Benchmark
	Culvert	T	Telephone Manhole		Asphalt Pavement
800	Index Contour				Concrete Pavement
799	Intermediate Contour	+799.9	Ex Spot Elevation		Gravel

LOCATION MAP

S.E. 1/4 SEC 33, T 23 N, R 20 E,
CITY OF DE PERE
BROWN COUNTY, WI

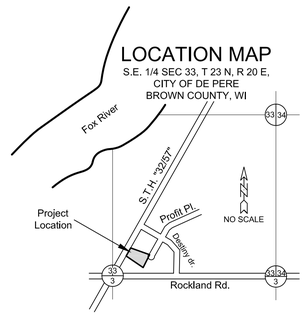

BENCHMARKS (City of DePere Datum)

BM 1 Fire Hydrant, Top Nut
South end of Profit Place
Elev 639.94'

BM 2 Fire Hydrant, Top Nut
NW cor, Profit Place and Destiny Drive
Elev 639.10'

STRUCTURE TABLE

Sanitary

MH 1	Rim	636.91'
	6" PVC SW	624.81'
	6" PVC SE	624.86'
	8" PVC NE	624.78'
MH 2	Rim	636.78'
	8" PVC SW	615.68'
	8" PVC SW	623.33'
	8" PVC NW	615.08'
	8" PVC NE	615.48'
	8" PVC NE	622.38'
	8" PVC SE	615.03'

Storm

OUTLET A	42" RCP	630.81'
MH B	Rim	636.82'
	42" RCP SW,NE	631.17'
	15" PVC NW,SW	631.17'
OUTLET C	12" Corrugated Plastic	630.81'
CB D	Rim	636.86'
	12" Corrugated Plastic SW	631.85'
	10" PVC E	632.11'

SURVEYOR'S CERTIFICATE

I, James R Sehloff, hereby certify that I have surveyed this property and this topographical map is a true representation thereof and shows the size and location of the property and the location of all apparent roadways. I hereby certify that said topographical survey and map were made in accordance with acceptable professional standards and that the information contained thereon is, to the best of my knowledge, information and belief, a true and accurate representation thereof.

James R Sehloff, Wisconsin Professional Land Surveyor No. S-2692 Date

NOTES

Existing utilities shown are indicated in accordance with available records and field measurements. The contractor shall be responsible for obtaining exact locations & elevations of all utilities, including sewer & water from the the property owners of the respective utilities. All utility the property owners shall be notified by the contractor 72 hours prior to excavation. Contact Digger's Hotline (1-800-242-8511) for exact utility locations.

This is not a boundary survey.

DAVEL ENGINEERING & ENVIRONMENTAL, INC.
CIVIL ENGINEERING CONSULTANTS
1811 Racine Street Menasha, WI 54952
Ph: 920-991-1666 Fax: 920-830-9595
www.davel.pro

TOPOGRAPHIC SURVEY

CyntrX
City of De Pere, Brown County, WI
For: CyntrX

Date: 07/10/2015
Filename: 4444TOPO.dwg
Author: Scott
Last Saved by: rick
Page 1.0

Jul 11, 2015 – 06:13 AM C:\PROJECTS\FA\Smet\14085–Cyntrx addition\drawings\44441TOPO.dwg Printed by: rick

Attachment: Cyntrex site paln submittal dwgs (3740 : Cyntrx Site Plan)

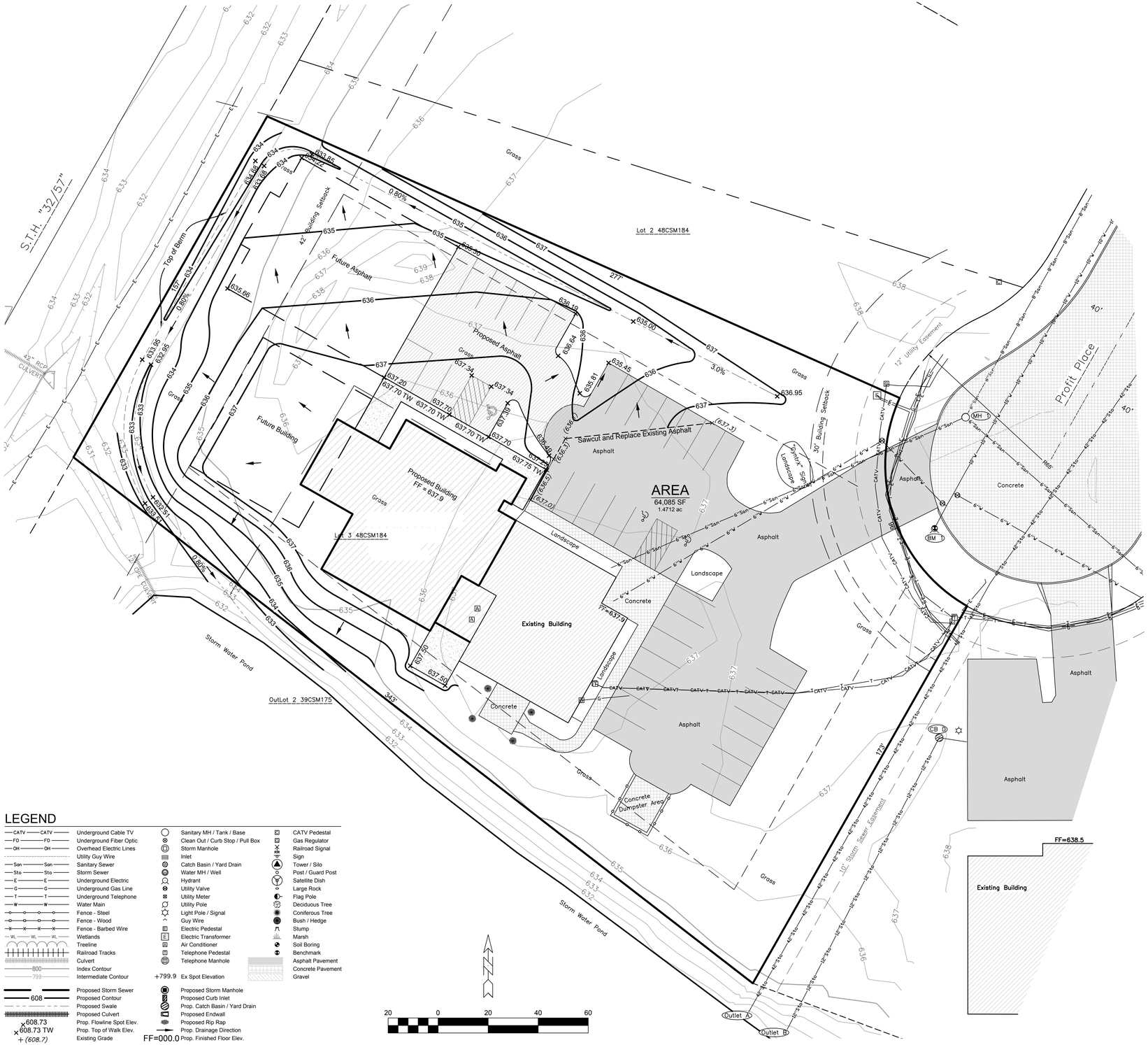

LOCATION MAP

S.E. 1/4 SEC 33, T 23 N, R 20 E,
CITY OF DE PERE
BROWN COUNTY, WI

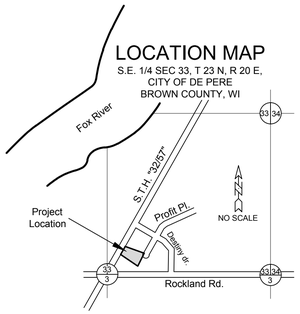

BENCHMARKS (City of DePere Datum)

BM 1 Fire Hydrant, Top Nut
South end of Profit Place
Elev 639.94'

BM 2 Fire Hydrant, Top Nut
NW cor, Profit Place and Destiny Drive
Elev 639.10'

NOTES:

1. Existing utilities shown are indicated in accordance with available records and field measurements. The contractor shall be responsible for obtaining exact locations & elevations of all utilities, including sewer and water from the owners of the respective utilities. All utility owners shall be notified by the contractor 72 hours prior to excavation. Contact Digger's Hotline (1-800-242-8511) for exact utility locations.
2. The Contractor shall verify all staking and field layout against the plan and field conditions prior to constructing the work and immediately notify the Engineer of any discrepancies.
3. Updated survey and title search have not been authorized and the boundary and easements shown may be inaccurate or incomplete.
4. Parking lot striping shall be 4" painted safety yellow.

LEGEND

Underground Cable TV	Sanitary MH / Tank / Base	CATV Pedestal
Underground Fiber Optic	Clean Out / Curb Stop / Pull Box	Gas Regulator
Overhead Electric Lines	Storm Manhole	Railroad Signal
Utility Guy Wire	Inlet	Sign
Sanitary Sewer	Catch Basin / Yard Drain	Tower / Silo
Storm Sewer	Water MH / Well	Post / Guard Post
Underground Electric	Hydrant	Satellite Dish
Underground Gas Line	Utility Valve	Large Rock
Underground Telephone	Utility Meter	Flag Pole
Water Main	Utility Pole	Deciduous Tree
Fence - Steel	Light Pole / Signal	Coniferous Tree
Fence - Wood	Guy Wire	Bush / Hedge
Fence - Barbed Wire	Electric Pedestal	Stump
Wetlands	Electric Transformer	Marsh
Treeline	Air Conditioner	Soil Boring
Railroad Tracks	Telephone Pedestal	Benchmark
Culvert	Telephone Manhole	Asphalt Pavement
Index Contour		Concrete Pavement
Intermediate Contour	+799.9 Ex Spot Elevation	Gravel
Proposed Storm Sewer	Proposed Storm Manhole	
608 Proposed Contour	Proposed Curb Inlet	
Proposed Swale	Prop. Catch Basin / Yard Drain	
Proposed Culvert	Proposed Endwall	
608.73 Prop. Flowline Spot Elev.	Proposed Rip Rap	
608.73 TW Prop. Top of Walk Elev.	Prop. Drainage Direction	
(608.7) Existing Grade	FF=000.0 Prop. Finished Floor Elev.	

DRAINAGE PLAN CERTIFICATION:

I, John R. Davel, Professional Engineer, hereby certify that this Drainage Plan will meet or exceed the requirements of the City of De Pere.

John R. Davel, P.E. E-25512 Date

DRAINAGE & GRADING PLAN

DAVEL ENGINEERING & ENVIRONMENTAL, INC.
CIVIL ENGINEERING CONSULTANTS
1811 Racine Street Menasha, WI 54952
Ph: 920-991-1866 Fax: 920-830-9595
www.davel.pro

Jul 08, 2015 – 05:03 PM J:\Projects\4444fin\dwg\Civil 3D\4444engr.dwg Printed by: mitch

SMET CONSTRUCTION SERVICES CORP. • DESIGN/BUILD/FINANCE
OUR REPUTATION IS BUILDING
CONSTRUCTION SERVICES
WWW.SMET.COM
CORPORATE OFFICE
300 N. BROADWAY, SUITE 2B
GREEN BAY, WI 54303
(800) 275-1672
(920) 592-3828
MARINETTE OFFICE
1428 MAIN STREET, SUITE D
MARINETTE, WI 54143
FAX (920) 592-3831
E-MAIL BUILD@SMET.COM

COPYRIGHT NOTICE:
THIS DRAWING IS THE PROPERTY OF C.S. SMET CONSTRUCTION CORP. AND IS LOANED FOR THE SOLE PURPOSE OF COMMUNICATING OUR OFFER FOR YOUR EVALUATION AND CONSIDERATION. REPRODUCTION IN WHOLE OR IN PART IS PROHIBITED WITHOUT THE EXPRESS WRITTEN CONSENT OF C.S. SMET CONSTRUCTION CORP. WE RESERVE THE RIGHT TO RECOVER ALL DAMAGES, LOST PROFIT, AND OUR ATTORNEY FEES IN YOUR ACCEPTANCE OF POSSESSION OF THIS PROPOSAL SIGNIFIES YOUR UNDERSTANDING AND ACCEPTANCE OF THIS CONDITION.

REVISIONS:	
5-20-15	ADENDA #1

FISHER & ASSOCIATES, LLC
Architects / Planners
215 PETER VAN DEHE WRIGHTSTOWN, WI 54180
Ph: (920) 532-9999 Fax (920) 532-9919
thefisherassociates@yahoo.com

PROJECT INFO:
PROPOSED BUILDING ADDITION FOR:
CYNTRX
2098 PROFIT PLACE
DE PERE, WI

DRAWN BY: MDB	SALES: SCOTT
SMET NO.: 14207	SHEET: 1.2
ENGR. NO.: 4444engr.dwg	
DATE: 07/8/2015	

Attachment: Cyntrex site plan submittal dwgs (3740 : Cyntrx Site Plan)

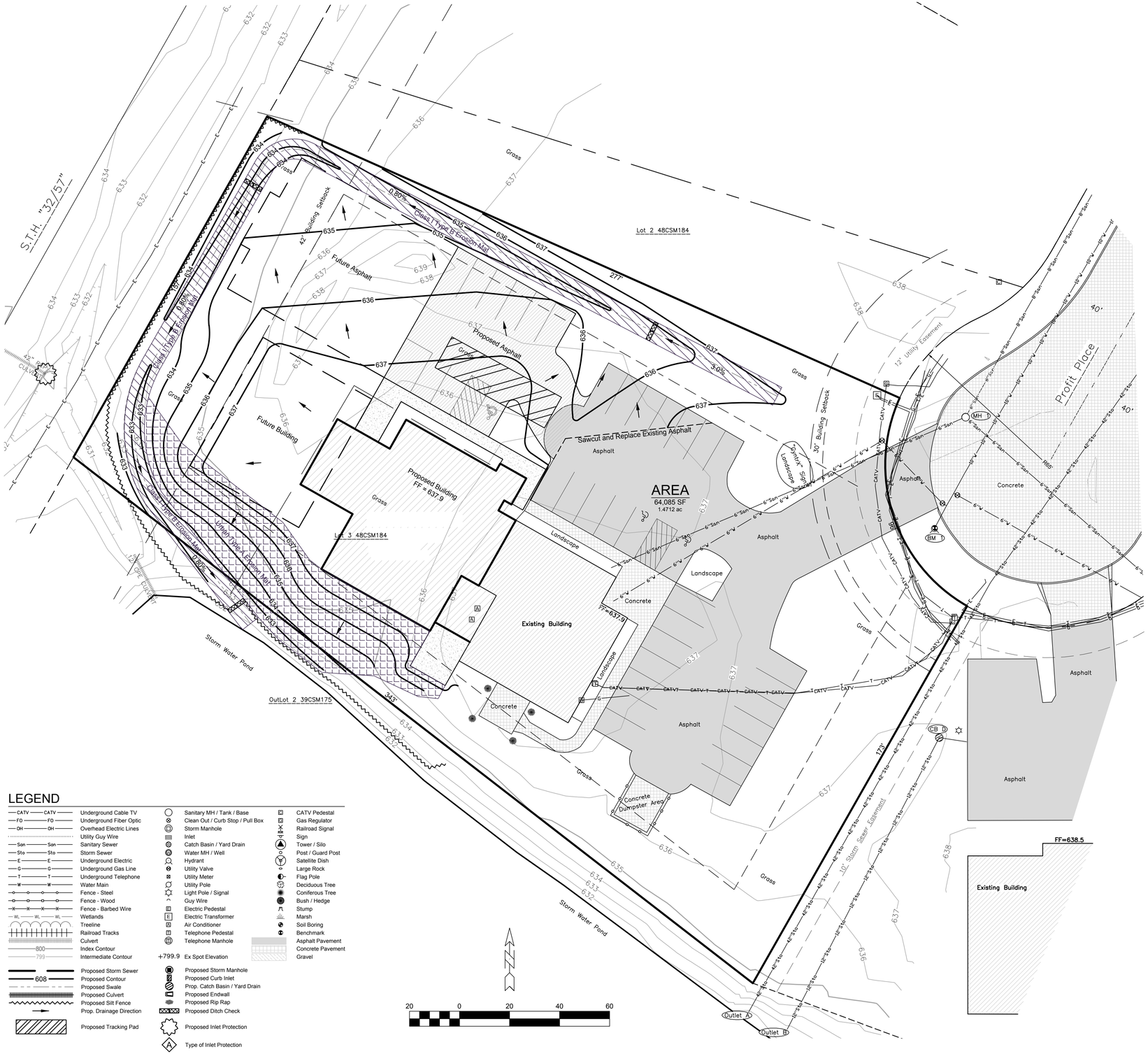

LEGEND

- Underground Cable TV
- Underground Fiber Optic
- Overhead Electric Lines
- Utility Guy Wire
- Sanitary Sewer
- Storm Sewer
- Underground Electric
- Underground Gas Line
- Underground Telephone
- Water Main
- Fence - Steel
- Fence - Wood
- Fence - Barbed Wire
- Wetlands
- Treeline
- Railroad Tracks
- Culvert
- Index Contour
- Intermediate Contour
- Proposed Storm Sewer
- Proposed Contour
- Proposed Swale
- Proposed Culvert
- Proposed Silt Fence
- Prop. Drainage Direction
- Proposed Tracking Pad
- Sanitary MH / Tank / Base
- Clean Out / Curb Stop / Pull Box
- Storm Manhole
- Inlet
- Catch Basin / Yard Drain
- Water MH / Well
- Hydrant
- Utility Valve
- Utility Meter
- Utility Pole
- Light Pole / Signal
- Guy Wire
- Electric Pedestal
- Electric Transformer
- Air Conditioner
- Telephone Pedestal
- Telephone Manhole
- +799.9 Ex Spot Elevation
- Proposed Storm Manhole
- Proposed Curb Inlet
- Prop. Catch Basin / Yard Drain
- Proposed Endwall
- Proposed Rip Rap
- Proposed Ditch Check
- Proposed Inlet Protection
- Type of Inlet Protection
- CATV Pedestal
- Gas Regulator
- Railroad Signal
- Sign
- Tower / Silo
- Post / Guard Post
- Satellite Dish
- Large Rock
- Flag Pole
- Deciduous Tree
- Coniferous Tree
- Bush / Hedge
- Stump
- Marsh
- Soil Boring
- Benchmark
- Asphalt Pavement
- Concrete Pavement
- Gravel

20 0 20 40 60

Planned Sediment and Erosion Control Practices

All erosion control practices shall be in place prior to disturbing the site. All sediment and erosion control devices and methods shall be in accordance with DNR Technical Standards and the WisDOT Erosion Control product acceptability lists (PAL). It is the responsibility of the Contractor to minimize the area disturbed and the duration of the disturbance. Erosion & sediment control measures shall be maintained on a continuing basis until the site is permanently stabilized. All applicable controls must be in place at the end of each work day. All off-site sediment deposits occurring as a result of construction work or a storm event shall be cleaned up at a minimum of the end of each day or as necessary. Flushing shall not be allowed.

1) Diverting Flow
   a) Permanent Diversion - Intended to divert runoff around disturbed areas to a location where the water can be discharged without adversely impacting the receiving area or channel. Permanent diversions will be used to route runoff to the ponds.

   b) Temporary Diversion - Intended to divert runoff around disturbed areas to a location where the water can be discharged without adversely impacting the receiving area or channel. Unlike a permanent diversion, the temporary diversion will be removed upon the completion of the project. Temporary diversions will be used upslope of any soil piles to reduce the amount of sediment transported. **All diversions shall be installed and maintained in accordance with DNR Technical Standard 1066.**

2) Overland Flow
   a) Silt Fence - Intended to provide a temporary barrier to the transportation of sediment offsite. Silt fence also reduces the velocity of sheet flow; thereby reducing the erosion potential of flowing water. Silt fencing is not to be used in areas of channelized flow and sediment deposits shall be removed when a 6 inch depth is reached. The silt fence shall be repaired or replaced as necessary to maintain a barrier. **All Silt Fence shall be installed and maintained in accordance with DNR Technical Standard 1056**. It will be placed at the following locations:
   i) along the site boundary where runoff will leave the site,
   ii) and at the toe of soil piles if the pile will remain in place for more than seven (7) days.

   b) Sediment Bale Barrier - Intended to intercept and detain small amounts of sediment from construction operations to prevent sediment from leaving the site. Sediment Bale Barriers are not to be used in areas of channelized flow. **All Sediment Bale Barriers shall be installed and maintained in accordance with DNR Technical Standard 1055**. Sediment Bale Barriers may be used in place of silt fence around soil stockpiles.

   c) Mulching and Erosion Mat - Intended to reduce the amount of erosion caused by raindrop impact, high overland and concentrated flow velocities and assist the establishment of both temporary and permanent vegetation. **All Erosion Mat shall be installed and maintained in accordance with DNR Technical Standards 1052 and 1053 and all Mulching with DNR Technical Standard 1058.** In addition to mulching, Erosion Mat is required per plan with installation per manufacturer specifications.

   d) Seeding - Intended to provide a reduction of overland flow velocities and stabilize disturbed areas. Seeding will be used on all disturbed areas within seven days of the completion of the activity that will disturb the area. **All seeding shall be in accordance with DNR Technical Standard 1059**. Seed mixture 40 (per WisDOT Specifications, Section 630) shall be applied at 5 pounds per 1000 square feet for permanent seeding prior to September 15th. If required, temporary seeding shall consist of Oats, Rye, Winter Wheat, and/or Annual Ryegrass applied at rates and during the season specified by the Technical Standard but no later than November 1st. Sod placement may occur at anytime sod is available and the sod and soil are not frozen.

3) Trapping Sediment in Channelized Flow
   a) Ditch Checks - Intended to settle suspended sediment in channelized flow by reducing the flow velocity. **All Ditch Checks shall be installed and maintained in accordance with DNR Technical Standard 1062**. Ditch Checks will be used where indicated on the plan as sediment logs. Additional ditch checks may be required in areas where erosion is occurring.

4) Permanent Channel Stabilization
   a) Vegetated Waterway - Intended to establish permanent vegetation to reduce the velocity of concentrated runoff thereby protecting the waterway from erosion. The type of erosion mat used will depend upon the velocity of the runoff in the channel and are specified in accordance with DOT Erosion Control Product Acceptability Lists (PAL). Vegetated waterways will be used in the following areas:
   i) drainage swales as indicated on the plans;

5) Inlet Protection Barriers - Intended to prevent the sedimentation of storm water conveyance structures. **All Inlet Protection Barriers shall be installed and maintained in accordance with DNR Technical Standard 1060**. As required, inlet protection barriers will be used at all storm sewer inlets as indicated on the plans.

6) Stone Tracking Pad - Intended to reduce the amount of sediment transported onto public roads. **The Tracking Pad shall be installed and maintained in accordance with DNR Technical Standard 1057**. A tracking pad will be constructed at the site entrance as indicated on the plan.

7) Dust Control - Intended to reduce surface to air transport of dust during construction. **Dust control shall be implemented with use of methods provided in DNR Technical Standard 1068.** These methods include the use of polymers, seeding, and mulch.

8) Dewatering BMP - Intended to reduce the amount of sediment conveyed due to dewatering practices. **Dewatering practices require compliance with DNR Technical Standard 1061.** The use of geotextile bags is required to prevent sedimentation with discharge to the adjacent storm water pond. The bags shall meet the requirements of Technical Standard 1061. Upon completion of the dewatering operation, all materials must be disposed of properly in accordance with all state and local requirements.

9) Waste Material - All onsite waste and construction materials shall be handled and disposed of properly. No pavement material, runoff from concrete washout, or other waste material is allowed to enter the storm sewer system or receiving waters.

Sequence of Construction

1) Obtain plan approval and other applicable permits
2) Install & maintain all erosion & sediment control measures: July 2015
3) Site grading: July 2015
4) Grade and Gravel Construction: August 2015
5) Construction of Building: August 2015
6) Asphalt Paving: September 2015
7) Stabilize lawn and ditch areas no later than one week after final grade is established. No later than September 15, 2015.
8) Topsoil critical areas and establish vegetation. Remove all temporary erosion and sediment control measures once the site has reached final stabilization, as defined in the permit. Water, if necessary, to establish healthy and well rooted vegetation.

Note: The dates provided are approximate and subject to weather conditions and overall project schedule. Several work items as listed above may occur simultaneously with others.

Maintenance Plan

The contractor is responsible for inspection and maintenance of sediment and erosion control measures until the project is completed. The inspections shall be made every seven days or within 24-hours of a rainfall event of 0.50-inch or greater. Any practices that are damaged or not working properly shall be repaired by the end of the day. Accumulated sediment shall be removed when it has reached a height of one-half the height of the structure. In addition, the following measures shall be taken:

1) All seeded areas will be re-seeded and mulched as necessary according to the specifications in the planned practices to maintain a vigorous, dense vegetated cover.
2) Remove silt fence and temporary structures only after final stabilization and vegetative cover is established.
3) Avoid the use of fertilizers and pesticides in or adjacent to channels or ditches.
4) Construction and waste materials shall be properly disposed.

Weekly inspection reports shall be maintained by the contractor. These reports shall document inspections and maintenance performed. The date and time of the inspections, the inspector's name, and the status of construction and any maintenance performed. Refer to the DNR website for a template; http://dnr.wi.gov/topic/stormwater/construction/forms.html. Upon request, the inspection reports shall be made available to the owner, the engineer, the Wisconsin Department of Natural Resources, or the City of De Pere.

EROSION CONTROL PLAN

DAVEL ENGINEERING & ENVIRONMENTAL, INC.
CIVIL ENGINEERING CONSULTANTS
1811 Racine Street Menasha, WI 54952
Ph: 920-991-1866 Fax: 920-830-9595
www.davel.pro

Jul 08, 2015 – 05:02 PM J:\Projects\4444file\dwg\Civil 3D\4444engr.dwg Printed by: mitch

COPYRIGHT NOTICE:
THIS DRAWING IS THE PROPERTY OF C.S. SMET CONSTRUCTION CORP. AND IS LOANED TO THE USER FOR THE SOLE PURPOSE OF COMMUNICATING OUR OFFER FOR YOUR EVALUATION AND CONSIDERATION. REPRODUCTION IN WHOLE OR IN PART IS NOT PERMITTED WITHOUT THE EXPRESS WRITTEN CONSENT OF C.S. SMET CONSTRUCTION CORP. WE RESERVE THE RIGHT AT OUR SOLE DISCRETION TO REQUEST THE RETURN OF ALL INFORMATION AND YOUR ACCEPTANCE OF POSSESSION OF THIS PROPOSAL SIGNIFIES YOUR UNDERSTANDING AND ACCEPTANCE OF THIS CONDITION.

REVISIONS:

FISHER & ASSOCIATES, LLC
Architects / Planners
215 PETERSON DRIVE WRIGHTSTOWN, WI 54180
Ph (920) 532-4999 Fax (920) 532-4998
http://fisherandassociates.com

PROJECT INFO:
PROPOSED BUILDING ADDITION FOR:
CYNTRX
2098 PROFIT PLACE
DE PERE, WI

DRAWN BY: MDB	SALES: SCOTT
SMET NO.: 14207	SHEET: 1.3
ENGR. NO.: 4444engr.dwg	
DATE: 07/8/2015	

C.S. SMET CONSTRUCTION SERVICES
CONSTRUCTION SERVICES CORP. ● DESIGN/BUILD/FINANCE
OUR REPUTATION IS BUILDING
(800) 275-1672
(920) 532-3828
FAX (920) 532-3831
E-MAIL BUILD●SMET.COM
WWW.SMET.COM
CORPORATE OFFICE
300 N. BROADWAY, SUITE 2B
GREEN BAY, WI 54303
MARINETTE OFFICE
1428 MAIN STREET, SUITE D
MARINETTE, WI 54143
SMET CONSTRUCTION SERVICES CORP. ● DESIGN/BUILD/FINANCE

Attachment: Cyntrex site paln submital dwgs (3740 : Cyntrx Site Plan)

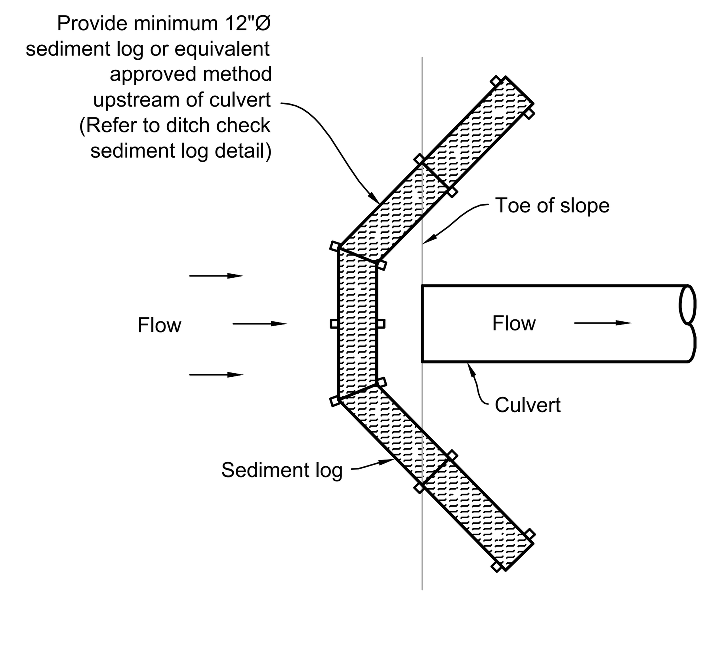

INLET PROTECTION

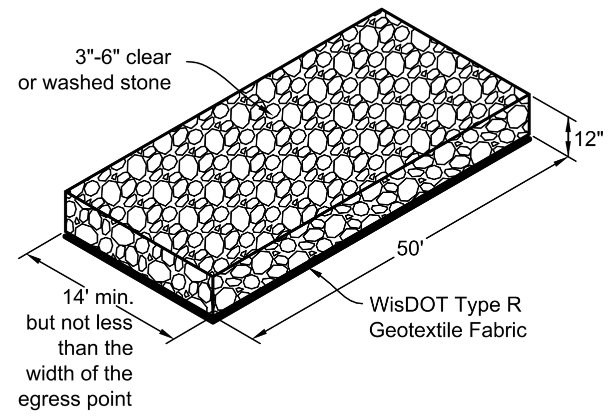

TRACKING PAD DETAIL

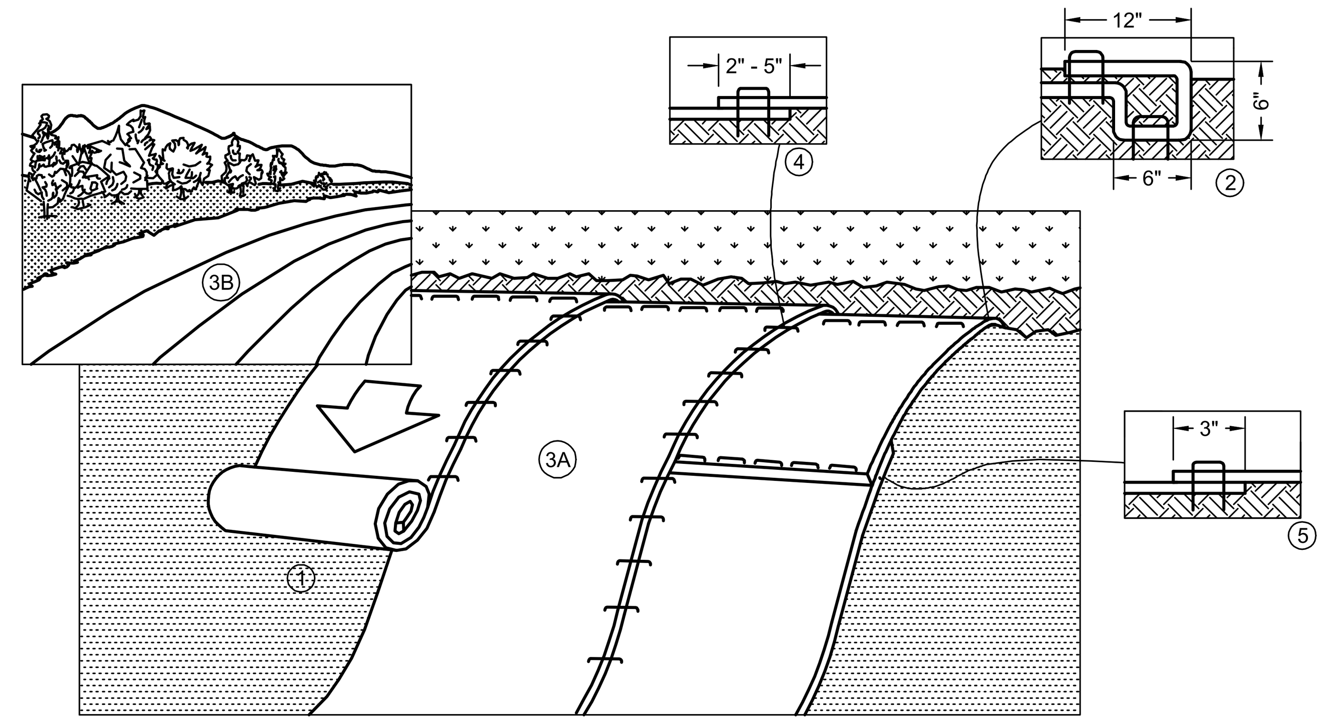

1. Prepare soil before installing Rolled Erosion Control Products (RECP's), including any necessary application of lime, fertilizer, and seed.
Note: When using cell-o-seed do not seed prepared area. Cell-o-seed must be installed with paper side down.
2. Begin at the top of the slope by anchoring the RECP's in a 6" (15 cm) deep x 6" (15 cm) wide trench with approximately 12" (30 cm) of RECP's extended beyond the up-slope portion of the trench. Anchor the RECP's with a row of staples/stakes approximately 12" (30 cm) apart in the bottom of the trench. Backfill and compact the trench after stapling. Apply seed to compacted soil and fold remaining 12" (30 cm) portion of RECP's back over seed and compacted soil. Secure RECP's over compacted soil with a row of staples/stakes spaced approximately 12" (30 cm) apart across the width of the RECP's.
3. Roll the RECP's (A.) down or (B.) horizontally across the slope. RECP's will unroll with appropriate side against the soil surface. All RECP's must be securely fastened to soil surface by placing staples/stakes in appropriate locations as shown in the staple pattern guide. When using the Dot system, staples/stakes should be placed through each of the colored Dots corresponding to the appropriate staple pattern.
4. The edges of parallel RECP's must be stapled with approximately 2" - 5" (5 cm - 12.5 cm) overlap depending on RECP's type.
5. Consecutive RECP's spliced down the slope must be placed end over end (shingle style) with an approximate 3" (7.5 cm) overlap. Staple through overlapped area, approximately 12" (30 cm) apart across entire RECP's width.
Note: * In loose soil conditions, the use of staple or stake lengths greater than 6" (30 cm) may be necessary to properly secure the RECP's.
6. Detail provided by North American Green (www.nagreen.com)
7. Turf Reinforcement Mats (TRM's) shall be installed in accordance with the above specifications for all RECP's. Anchoring size and pattern is to be installed per manufacturer specifications for clay soils having 4:1 slope. All TRM's shall be topsoil filled, seeded, and covered with a Class 2, Type B erosion mat in accordance with all manufacturer specifications.

EROSION/TURF REINFORCEMENT MAT SLOPE INSTALLATION

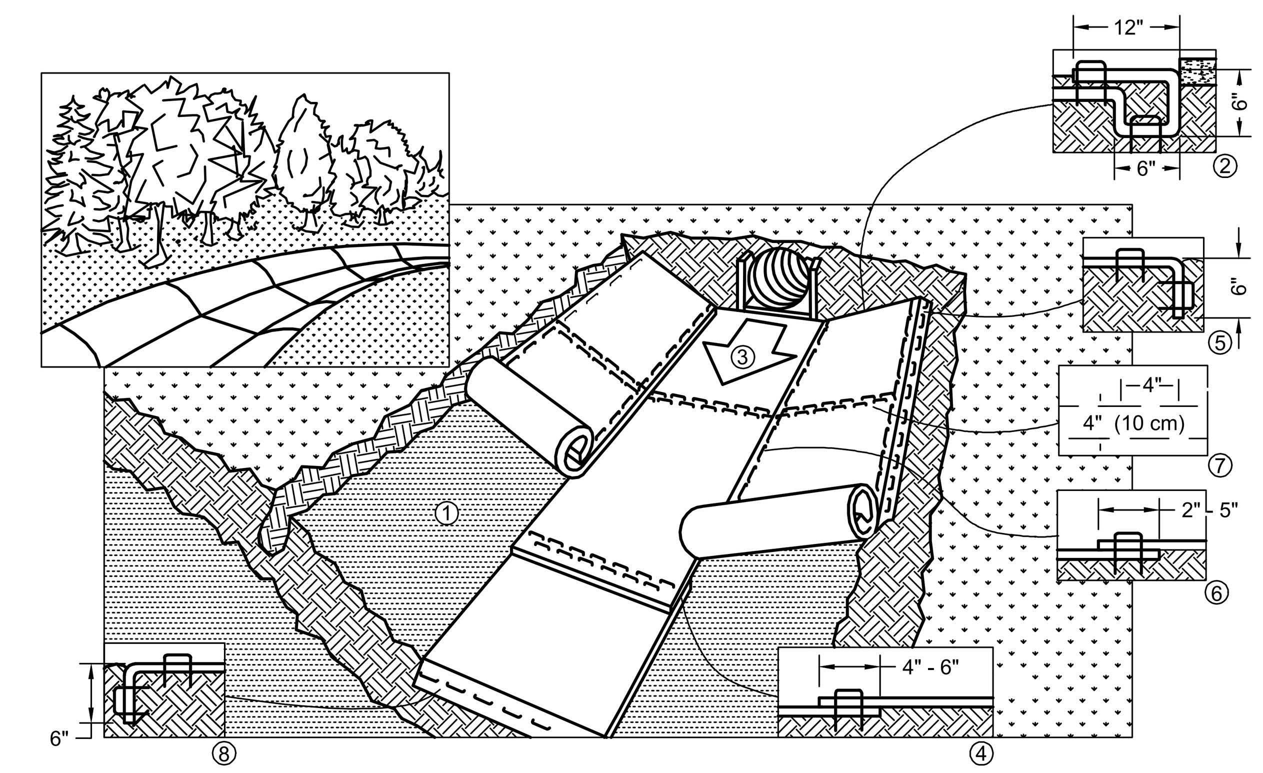

1. Prepare soil before installing Rolled Erosion Control Products (RECP's), including any necessary application of lime, fertilizer, and seed.
Note: When using cell-o-seed do not seed prepared area. Cell-o-seed must be installed with paper side down.
2. Begin at the top of the channel by anchoring the RECP's in a 6" (15 cm) deep x 6" (15 cm) wide trench with approximately 12" (30 cm) of RECP's extended beyond the up-slope portion of the trench. Anchor the RECP's with a row of staples/stakes approximately 12" (30 cm) apart in the bottom of the trench. Backfill and compact the trench after stapling. Apply seed to compacted soil and fold remaining 12" (30 cm) portion of RECP's back over seed and compacted soil. Secure RECP's over compacted soil with a row of staples/stakes spaced approximately 12" (30 cm) across the width of the RECP's.
3. Roll center RECP's in direction of water flow in bottom of channel. RECP's will unroll with appropriate side against the soil surface. All RECP's must be securely fastened to soil surface by placing staples/stakes in appropriate locations as shown in the staple pattern guide. When using the DOT system, staples/stakes should be placed through each of the colored dots corresponding to the appropriate staple pattern.
4. Place consecutive RECP's end over end (shingle style) with a 4" - 6" (10 cm - 15 cm) overlap. Use a double row of staples staggered 4" (10 cm) apart and 4" (10 cm) on center to secure RECP's.
5. Full length edge of RECP's at top of side slopes must be anchored with a row of staples/stakes approximately 12" (30 cm) apart in a 6" (15 cm) deep x 6" (15 cm) wide trench. Backfill and compact the trench after stapling.
6. Adjacent RECP's must be overlapped approximately 2" - 5" (5cm - 12.5 cm) (depending on RECP's type) and stapled.
7. In high flow channel applications a staple check slot is recommended at 30 to 40 foot (9 M - 12 M) intervals. Use a double row of staples staggered 4" (10 cm) apart and 4" (10 cm) on center over entire width of the channel.
8. The terminal end of the RECP's must be anchored with a row of staples.stakes approximately 12" (30 cm) apart in a 6" (15 cm) deep x 6" (15 cm) wide trench. Backfill and compact the trench after stapling.
Note:
* In loose soil conditions, the use of staple or stake lengths greater than 6" (15 cm) may be necessary to properly anchor the RECP's.
9. Detail provided by North American Green (www.nagreen.com)

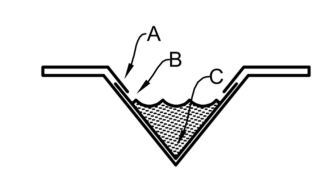

Critical Points
A. Overlaps and seams
B. Projected Water line
C. Channel Bottom/side slope vertices

Note:
* Horizontal staple spacing should be altered if necessary to allow staples to secure the critical points along the channel surface.

** In loose soil conditions, the use of staple or stake lengths greater than 6" (15 cm) may be necessary to properly anchor the RECP's.

EROSION MAT CHANNEL INSTALLATION

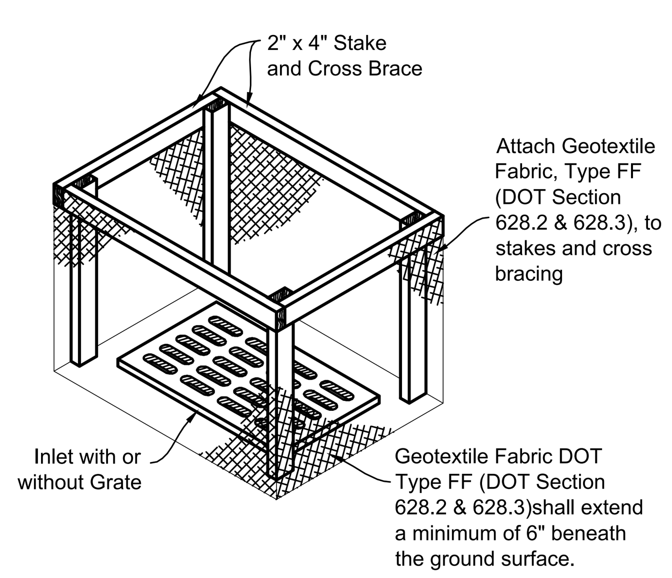

INLET PROTECTION, TYPE A

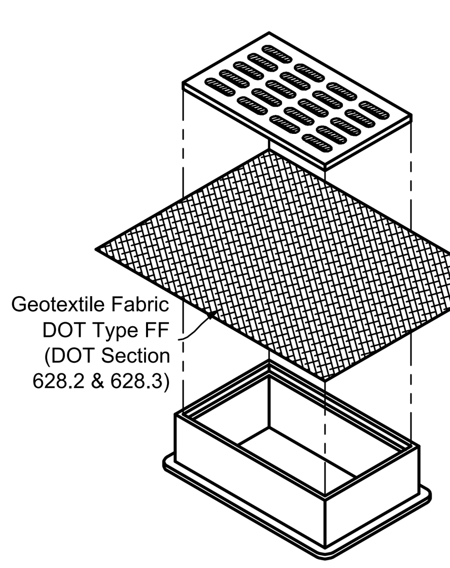

INLET PROTECTION, TYPE B

(CAN BE INSTALLED IN ANY INLET WITHOUT A CURB BOX)

GENERAL NOTES:

Inlet protection devices shall be maintained or replaced at the direction of the engineer.

Manufactured alternatives approved and listed on the DOT Erosion Control Product Acceptability list may be substituted.

When removing or maintaining inlet protection, care shall be taken so that the sediment trapped on the geotextile fabric does not fall into the inlet. Any material falling into the inlet shall be removed immediately.

1. Finished size, including flap pockets where required, shall extend a minimum of 10" around the perimeter to facilitate maintenance or removal.

2. For inlet protection, Type C (with curb box), an additional 10" of fabric is wrapped around the wood and secured with staples. The wood shall not block the entire height of the curb box opening.

3. Flap pockets shall be large enough to accept wood 2x4.

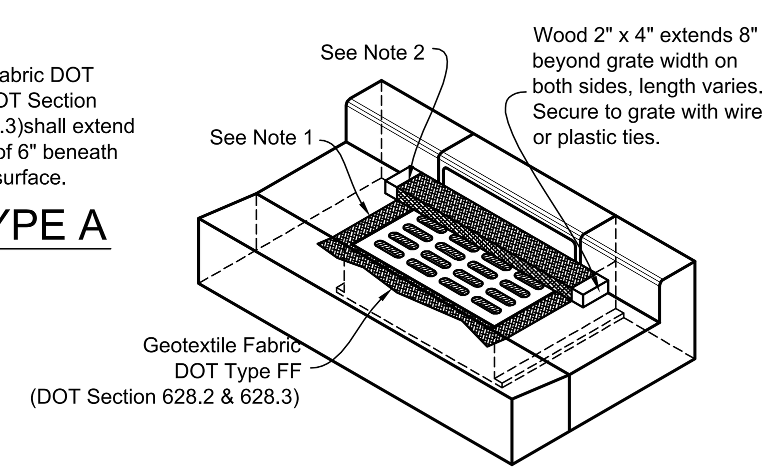

INLET PROTECTION, TYPE C

INSTALLATION NOTES:

Inlet protection Type A shall be utilized around field inlets until permanent stabilization methods have been established. Inlet protection Type A shall be utilized on pavement inlets prior to installation of curb and gutter or pavement.

Inlet protection Type B shall be utilized on street inlets without curb heads, once surrounding surface is in place.

Inlet protection Type C shall be utilized on street inlets with curb heads.

TYPE B & C
Trim excess fabric in the flow line to within 3" of the grate.

The contractor shall demonstrate a method of maintenance, using a sewn flap, hand holds, or other method to prevent accumulated sediment from entering the inlet.

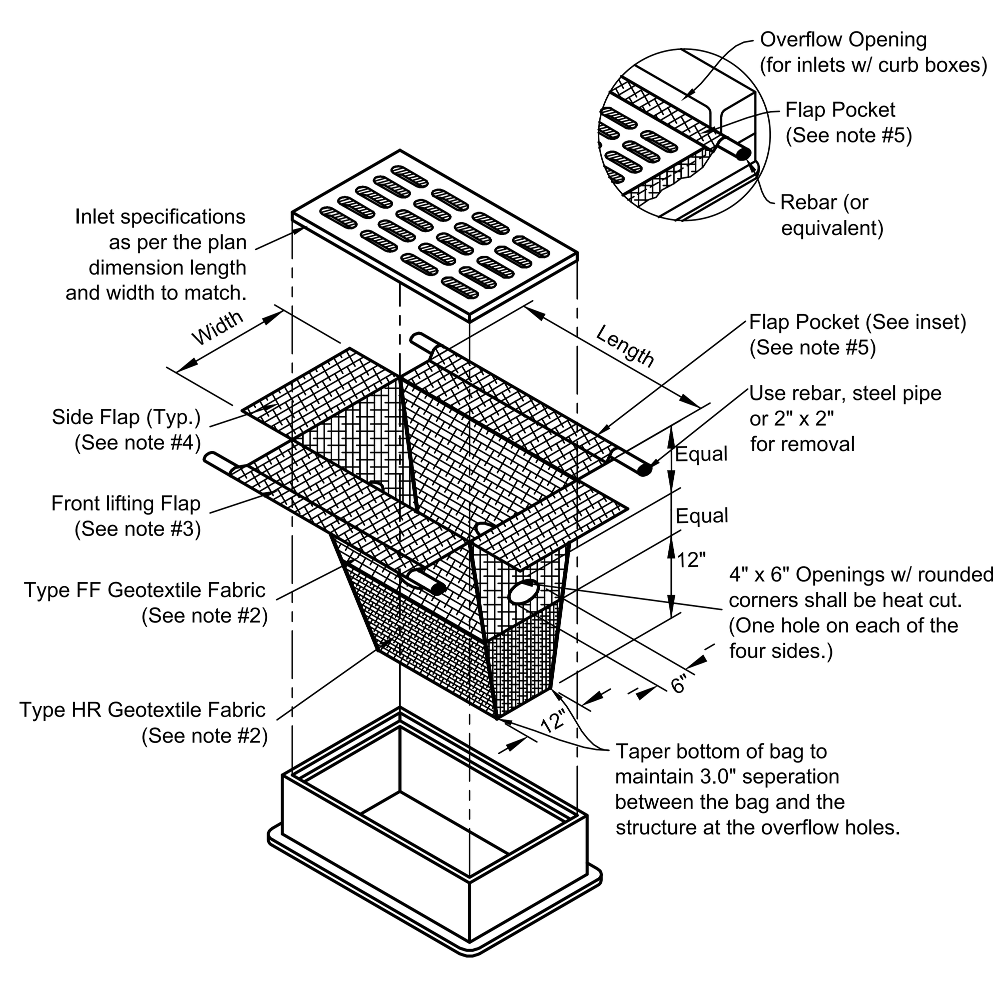

INLET PROTECTION, TYPE D-HR

(CAN BE INSTALLED IN ANY INLET WITH OR WITHOUT A CURB BOX)

NOTES:

1. Taper bottom of bag to maintain three inches of clearance between the bag and the structure, measured from the bottom of the overflow openings to the structure wall.
2. Geotextile fabric, Type FF for flaps and top half of filter bag. Geotextile fabric, Type HR for bottom half of filter bag with front, back, and bottom being one piece.
3. Front lifting flap is to be used when removing and maintaining filter bag.
4. Side flaps shall be a maximum of two inches long. Fold the fabric over and reinforce with multiple stitches.
5. Flap pockets shall be large enough to accept wood 2" x 2". The rebar, steel pipe, or wood shall be installed in the rear flap and shall not block the top half of the curb face opening.

MAINTENANCE NOTES:

1. When removing or maintaining inlet protection, care shall be taken so that the sediment trapped in the fabric does not fall into the structure. Material that has fallen into the inlet shall be immediately removed.

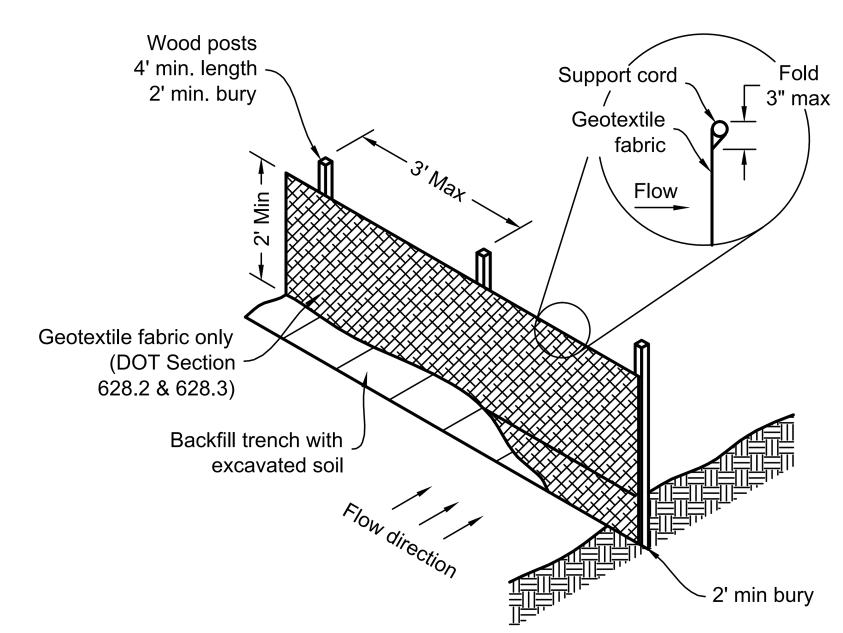

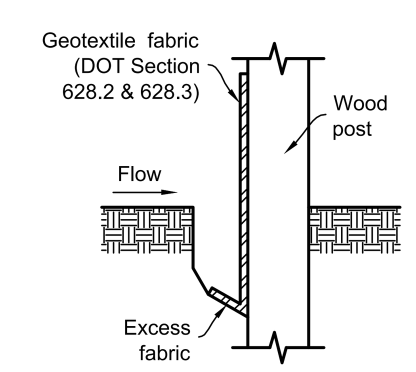

TRENCH DETAIL

Silt fence notes:
1. Detail of construction not shown on this drawings shall conform to criteria set by authorities having jurisdiction and by DNR Technical Standard 1056.
2. When possible, the silt fence should be constructed in an arc or horseshoe shape with the ends pointing upslope to maximize both strength and effectiveness.
3. Attach the fabric to the posts with wire staples or wooden lath and nails.
4. 8'-0" post spacing allowed if a woven geotextile fabric is used.
5. Trench shall be a minimum of 4" wide and 6" deep to bury and anchor the geotextile fabric. Fold material to fit trench and backfill and compact trench with excavated soil.
6. Geotextile fabric shall be reinforced with an industrial polypropylene netting with a maximum mesh spacing of 3/4" or equal. A heavy-duty nylon top support chord or equivalent is required.
7. Steel posts shall be studded "tee" or "u" type with a minimum weight of 128 lbs/lineal foot (without anchor). Fin anchors shall be a minimum size of 4" diameter or 1 1/2" x 3 1/2", except wood posts for geotextile fabric reinforced with netting shall be a minimum size of 1 1/8" x 1 1/8" oak or hickory.

SILT FENCE INSTALLATION

CONSTRUCTION DETAILS

DAVEL ENGINEERING & ENVIRONMENTAL, INC.
CIVIL ENGINEERING CONSULTANTS
1811 Racine Street Menasha, WI 54952
Ph: 920-991-1866 Fax: 920-830-9595
www.davel.pro

Jul 08, 2015 – 05:02 PM J:\Projects\4444fis\dwg\Civil 3D\4444engr.dwg Printed by: mitch

5.c

SMET CONSTRUCTION SERVICES
OUR REPUTATION IS BUILDING
CORPORATE OFFICE
300 N. BROADWAY, SUITE 2B
GREEN BAY, WI 54303
MARINETTE OFFICE
1428 MAIN STREET, SUITE D
MARINETTE, WI 54143
(800) 275-1872
(920) 532-3828
FAX (920) 532-3831
E-MAIL BUILD@SMET.COM
WWW.SMET.COM
SMET CONSTRUCTION SERVICES CORP. • DESIGN/BUILD/FINANCE

COPYRIGHT NOTICE:
THIS DRAWING IS THE PROPERTY OF C.S. SMET CONSTRUCTION CORP. AND IS SUPPLIED FOR THE SOLE PURPOSE OF COMMUNICATING OUR OFFER FOR YOUR EVALUATION AND CONSIDERATION. REPRODUCTION IN WHOLE, OR IN PART, IS NOT PERMITTED WITHOUT THE EXPRESS WRITTEN CONSENT OF C.S. SMET CONSTRUCTION CORP. WE RESERVE THE RIGHT, AT OUR SOLE DISCRETION, TO REQUEST THEIR RETURN, IN WHOLE, UPON NOTICE. YOUR ACCEPTANCE OF POSSESSION OF THIS PROPOSAL SIGNIFIES YOUR UNDERSTANDING AND ACCEPTANCE OF THIS CONDITION.

REVISIONS:

FISHER & ASSOCIATES, LLC
Architects / Planners
215 PETERLYNN DRIVE WRIGHTSTOWN, WI 54180
Ph.(920) 532-9199 Fax (920) 532-9119
rfisher@fisherandassociatesllc.com

PROJECT INFO:
PROPOSED BUILDING ADDITION FOR:
CYNTRX
2098 PROFIT PLACE
DE PERE, WI

DRAWN BY:	SALES:
MDB	SCOTT
SMET NO.:	SHEET:
14207	2.1
ENGR. NO.:	
4444engr.dwg	
DATE:	
07/8/2015	

Attachment: Cyntrex site paln submittal dwgs (3740 : Cyntrx Site Plan)

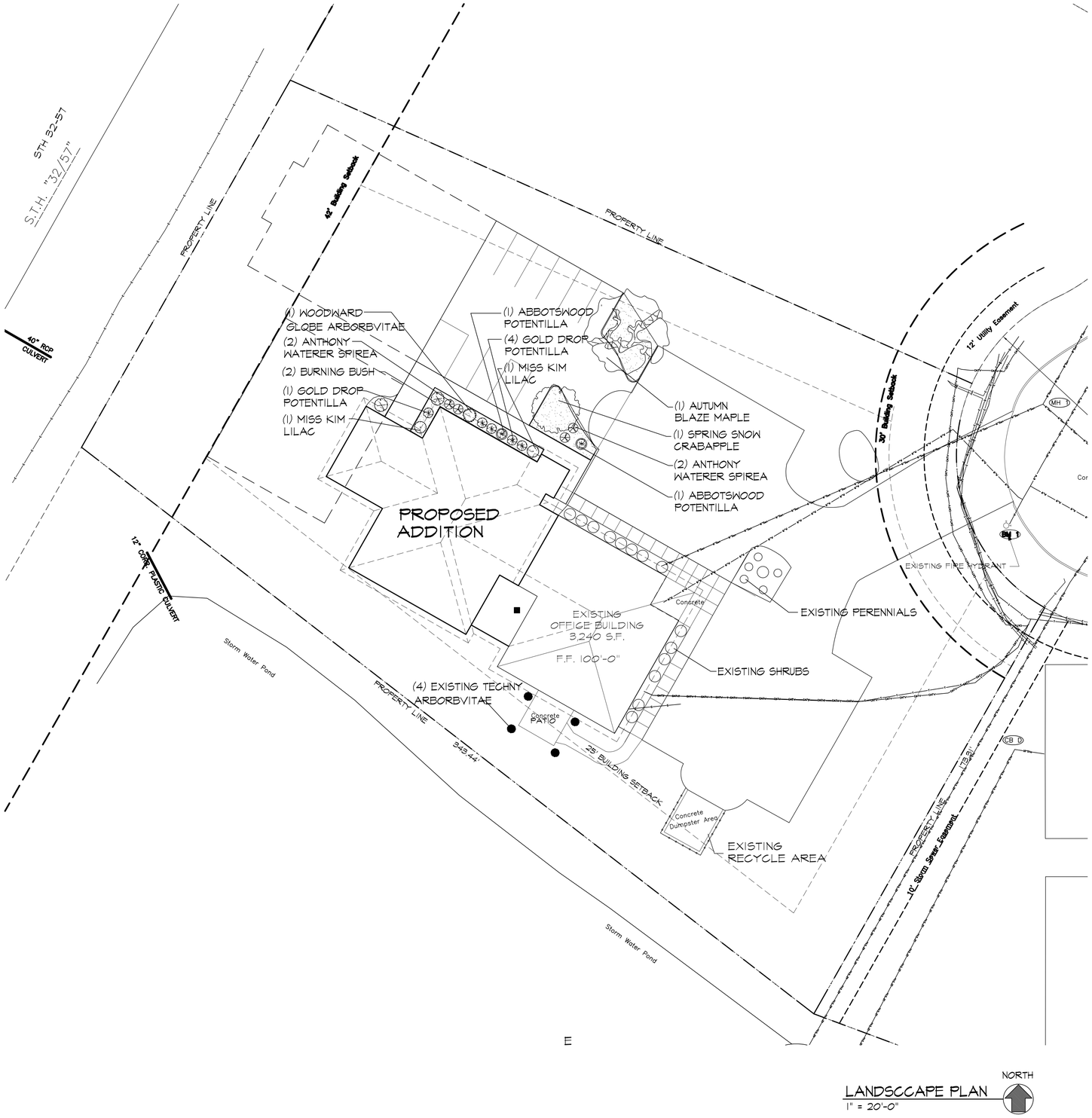

LANDSCCAPE PLAN
1" = 20'-0"

NORTH

LANDSCAPE TREE SCHEDULE

	DESCRIPTION	QTY.	SIZE	REMARKS
	AUTUMN BLAZE MAPLE	1	1.5" DIA.	AT 6" ABOVE GROUND
	SPRING SNOW SEEDLESS CRABAPPLE	1	1.5" DIA.	AT 6" ABOVE GROUND

LANDSCAPE SHRUB SCHEDULE

	DESCRIPTION	QTY.	SIZE	PTS.	REMARKS
	WOODWARD GLOBE ARBORVITAE	1	24" MIN.		
	BURNING BUSH	2	24" MIN.		
	MISS KIM LILAC	2	30" MIN.		
	ANTHONY WATERER SPIREA	4	14" MIN.		
	GOLD DROP POTENTILLA	5	14" MIN.		
	ABBOTSWOOD POTENTILLA	2	14" MIN.		

SEED MIX
20% RUGBY II KENTUCKY BLUEGRASS
20% NEW GLADE KENTUCKY BLUEGRASS
20% ASPEN KENTUCKY BLUEGRASS
20% BLUE MOON KENTUCKY BLUEGRASS
15% BLUE CHIP KENTUCKY BLUEGRASS
5% STATESMAN PERENNIAL RYE GRASS

ALL NEW PLANTING AREAS TO HAVE PLASTIC EDGING WHERE NEEDED AND WEED BARRIER AND LANDSCAPE STONE TO MATCH EXISTING

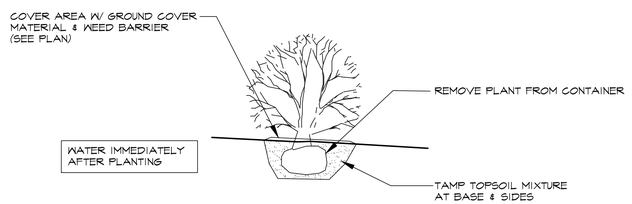

SHRUB/TREE PLANTING DETAIL

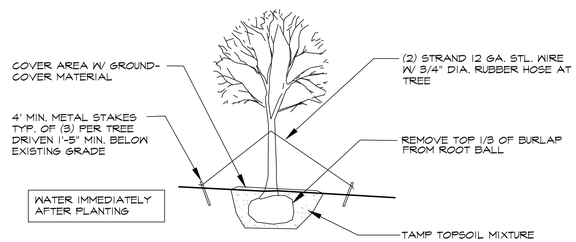

TREE PLANTING DETAIL

SMET CONSTRUCTION SERVICES CORP. • DESIGN/BUILD/FINANCE
OUR REPUTATION IS BUILDING
CONSTRUCTION SERVICES
WWW.SMET.COM
E-MAIL BUILD@SMET.COM
FAX (920) 832-3831
MARINETTE OFFICE 1428 MAIN STREET, SUITE D MARINETTE, WI 54143 (920) 832-3828
CORPORATE OFFICE 300 N. BROADWAY, SUITE 2B GREEN BAY, WI 54303 (800) 275-8572

COPYRIGHT NOTICE:
THIS DRAWING IS THE PROPERTY OF C.S. SMET CONSTRUCTION CORP. AND IS SUPPLIED FOR THE SOLE PURPOSE OF COMMUNICATING OUR OFFER FOR YOUR EVALUATION AND OUR ACCEPTANCE. IT SHALL NOT BE USED OR IN PART, IS NOT PERMITTED WITHOUT THE EXPRESS WRITTEN CONSENT OF C.S. SMET CONSTRUCTION CORP. WE RESERVE THE RIGHT TO ACCEPT OR REJECT ANY OR ALL BIDS. THEIR RETURN, IN WHOLE, UPON NOTICE YOUR ACCEPTANCE OF POSSESSION OF THIS PROPOSAL SIGNIFIES YOUR UNDERSTANDING AND ACCEPTANCE OF THIS CONDITION

REVISIONS:

FISHER & ASSOCIATES, LLC
Architects / Planners
ROBERT J. FISHER, AIA
250 PETERS DRIVE KEWAUNEE, WI 54216
(920) 388-1234 FAX (920) 388-1241
rfisher@fisherandassociates.com

PROJECT INFO:
PROPOSED BUILDING ADDITION FOR:
CYNTRX
2098 PROFIT PLACE
DE PERE, WI

DRAWN BY: RJF	SALES: SCOTT
SMET NO.: 14207	SHEET: L1.0
ARCHT. NO.: 14085	
DATE: MAY 12, 2015	

Attachment: Cyntrex site pain submittal dwgs (3740 : Cyntrx Site Plan)

EXISTING
FLOOR PLAN
W/ DEMOLITION
1/8" = 1'-0"

NORTH

COPYRIGHT NOTICE:
THIS DRAWING IS THE PROPERTY OF C.S. SMET CONSTRUCTION CORP. AND IS SUPPLIED FOR THE SOLE PURPOSE OF OBTAINING A BID FOR OUR OFFER FOR YOUR EVALUATION AND CONSIDERATION. REPRODUCTION IN WHOLE OR IN PART IS PROHIBITED WITHOUT THE EXPRESS WRITTEN CONSENT OF C.S. SMET CONSTRUCTION CORP. WE RESERVE THE RIGHT, AT OUR SOLE DISCRETION, TO REQUEST THE RETURN OF THIS DRAWING AND NOTICE OF YOUR ACCEPTANCE OF POSSESSION OF THIS PROPOSAL SIGNIFIES YOUR UNDERSTANDING AND ACCEPTANCE OF THIS CONDITION.

SMET
CONSTRUCTION SERVICES
OUR REPUTATION IS BUILDING

CORPORATE OFFICE
300 N. BROADWAY, SUITE 2B
GREEN BAY, WI 54303
(800) 275-1872
(920) 532-3828
FAX (920) 532-3831

MARINETTE OFFICE
1428 MAIN STREET, SUITE D
MARINETTE, WI 54143
E-MAIL BUILD@SMET.COM
WWW.SMET.COM

SMET CONSTRUCTION SERVICES CORP. • DESIGN/BUILD/FINANCE

REVISIONS:

FISHER & ASSOCIATES, LLC
Architects / Planners
25 PETERSON DRIVE MIGHTSTOWN, NJ 8480
PH (609) 632-4484 Fax (609) 632-4481
mfisher@fisherandassociates.com

PROJECT INFO:

PROPOSED BUILDING ADDITION FOR:
CYNTRX
2098 PROFIT PLACE
DE PERE, WI

DRAWN BY: RJF	SALES: SCOTT
SMET NO.: 14207	SHEET: A1.0
ARCHT. NO.: 14085	
DATE: MAY 12, 2015	

Attachment: Cyntrex site paln submittal dwgs (3740 : Cyntrx Site Plan)

PROPOSED FLOOR PLAN
1/8" = 1'-0"

NORTH

SMET CONSTRUCTION SERVICES CORP. • DESIGN/BUILD/FINANCE
WWW.SMET.COM
E-MAIL BUILD ● SMET.COM
FAX (920) 532-3831
(920) 532-3828
(800) 275-1872
OUR REPUTATION IS BUILDING
CONSTRUCTION SERVICES
SMET
CORPORATE OFFICE
300 N. BROADWAY, SUITE 2B
GREEN BAY, WI 54303
MARINETTE OFFICE
1428 MAIN STREET, SUITE D
MARINETTE, WI 54143

COPYRIGHT NOTICE:
THIS DRAWING IS THE PROPERTY OF C.S. SMET CONSTRUCTION CORP. AND IS SUPPLIED FOR THE SOLE PURPOSE OF COMMUNICATING OUR OFFER FOR YOUR EVALUATION AND CONSIDERATION. REPRODUCTION IN WHOLE OR IN PART IS PROHIBITED WITHOUT THE EXPRESS WRITTEN CONSENT OF C.S. SMET CONSTRUCTION CORP. WE RESERVE THE RIGHT, AT OUR SOLE DISCRETION, TO REQUEST THE RETURN OF THIS DRAWING FOR ANY REASON. YOUR ACCEPTANCE OF POSSESSION OF THIS PROPOSAL SIGNIFIES YOUR UNDERSTANDING AND ACCEPTANCE OF THIS CONDITION.

REVISIONS:

FISHER & ASSOCIATES, LLC
Architects / Planners
25 PETERSON DRIVE KRAKENSTORM, MI 54400
Ph (920) 532-4881 Fax (920) 532-4941
mbaxterfisherandassociates@gmail.com

PROJECT INFO:

PROPOSED BUILDING ADDITION FOR:
CYNTRX

2098 PROFIT PLACE
DE PERE, WI

DRAWN BY: RJF	SALES: SCOTT
SMET NO.: 14207	SHEET: A1.1
ARCHT. NO.: 14085	
DATE: MAY 12, 2015	

Attachment: Cyntrx site pain submittal dwgs (3740 : Cyntrx Site Plan)

EXISTING
SOUTH ELEVATION
1/8" = 1'-0"

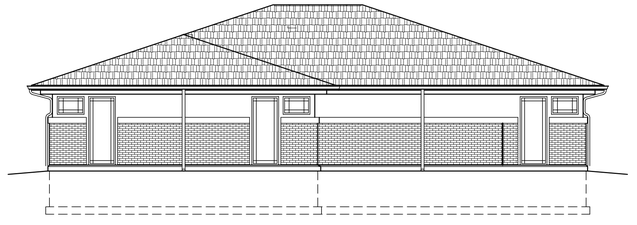

EXISTING
WEST ELEVATION
1/8" = 1'-0"

EXISTING
NORTH ELEVATION
1/8" = 1'-0"

EXISTING
EAST ELEVATION
1/8" = 1'-0"

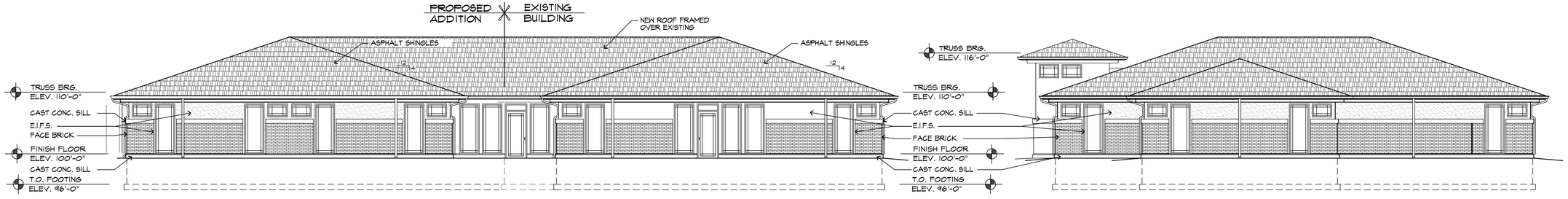

PROPOSED
SOUTH ELEVATION
1/8" = 1'-0"

PROPOSED
WEST ELEVATION
1/8" = 1'-0"

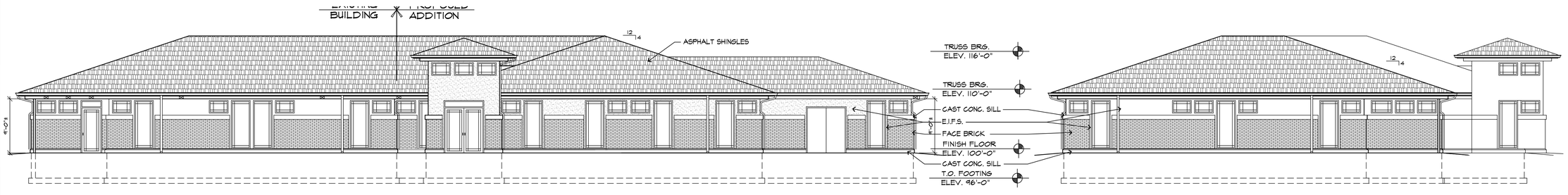

PROPOSED
NORTH ELEVATION
1/8" = 1'-0"

PROPOSED
EAST ELEVATION
1/8" = 1'-0"

SMET
CONSTRUCTION SERVICES

CORPORATE OFFICE
300 N. BROADWAY, SUITE 2B
GREEN BAY, WI 54303

MARINETTE OFFICE
1428 MAIN STREET, SUITE D
MARINETTE, WI 54143

(800) 275-1872
(920) 532-3828
FAX (920) 532-3831
E-MAIL BUILD@SMET.COM
WWW.SMET.COM

OUR REPUTATION IS BUILDING

SMET CONSTRUCTION SERVICES CORP. • DESIGN/BUILD/FINANCE

COPYRIGHT NOTICE:
THIS DRAWING IS THE PROPERTY OF C.S. SMET CONSTRUCTION CORP. AND IS SUPPLIED FOR THE SOLE PURPOSE OF CONSIDERING AND MAKING OUR OFFER FOR YOUR EVALUATION AND CONSIDERATION. REPRODUCTION IN WHOLE OR IN PART, IS NOT PERMITTED WITHOUT THE EXPRESS WRITTEN CONSENT OF C.S. SMET CONSTRUCTION CORP. WE RESERVE THE RIGHT, AT OUR SOLE DISCRETION, TO REQUEST THE RETURN, IN WHOLE OR IN PART, OF THE YOUR ACCEPTANCE OF THIS PROPOSAL SIGNIFIES YOUR UNDERSTANDING AND ACCEPTANCE OF THIS CONDITION.

REVISIONS:

FISHER & ASSOCIATES, LLC
Architects / Planners
25 PETERLYN DRIVE, PEMBROKE, NH 3460
PH (603) 753-4981 Fax (603) 932-4081
rfisher@fisherassociatesllc.com

PROJECT INFO:

PROPOSED BUILDING ADDITION FOR: CYNTRX

2098 PROFIT PLACE
DE PERE, WI

DRAWN BY: RJF	SALES: SCOTT
SMET NO.: 14207	SHEET: A3.1
ARCHT. NO.: 14085	
DATE: MAY 12, 2015	

Attachment: Cyntrex site paln submittal dwgs (3740 : Cyntrx Site Plan)

Attachment: Cyntrex existing photo (3740 : Cyntrx Site Plan)

City of De Pere, Wisconsin

Request For Plan Commission Action

MEETING DATE:	**July 27, 2015**
DEPARTMENT:	**Planning**
FROM:	**Sarah Wallace**
SUBJECT:	**Review the CSM Application for a single lot CSM on Scheuring Rd. Surveyor: Excel Engineering Inc.**

ATTACHMENTS:

- PC_Staff_July27_CSM (PDF)
- Signed Application CSM Review_Scheuring (PDF)
- 2015-07-08-CSM (PDF)

Item 6: **Review the CSM Application for a single lot CSM on Scheuring Rd. Surveyor: Excel Engineering Inc.**

Andy Dumke has completed a CSM combining two lots owned by Nicolet Commercial DePere LLC on the north side of Scheuring Road. The combined lot 1 is 0.807 acres (35,172 sq.ft.).

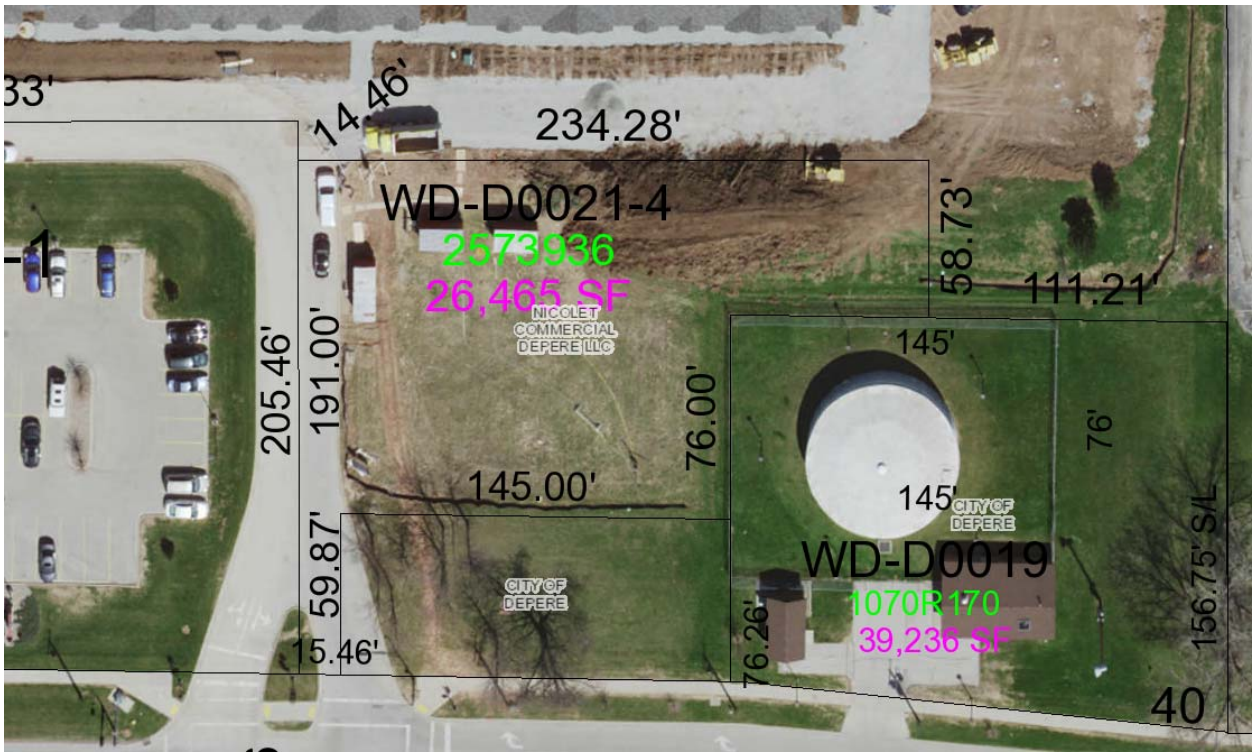

Figure 1. Location of proposed CSM.

Recommendation

Staff would recommend approval of the CSM. The CSM needs the following corrections:

1. Easement(s) to be shown on CSM.
2. CSM must meet the requirements specified by Brown County Planning.
3. Certificate for City of De Pere should be Shana Defnet, City Clerk.

Attachment: PC_Staff_July27_CSM (3742 : Scheuring Rd CSM)

	CITY OF DE PERE **APPLICATION FOR CSM REVIEW**	**Fee:** $ 330.00 **Receipt #:** **Date:**

Read all instructions provided before completing. If additional space is needed, attach additional pages. Type or use black ink.

SECTION 1: Applicant / Permittee Information

Applicant Name (Ind., Org. or Entity) Nicolet Commercial De Pere, LLC	Authorized Representative Andy Dumke	Title Owner	
Mailing Address 230 Ohio Street, Suite 200	City Oshkosh	State WI	ZIP Code 54902
Email Address andy@alliancedevelopment.biz	Phone Number (incl. area code) (920) 230-3628	Fax Number (incl. area code) (920) 230-6484	

SECTION 2: Landowner Information (complete these fields when project site owner is different than applicant)

Name (Ind. Org. or Entity) Nicolet Commercial De Pere, LLC	Contact Person Andy Dumke	Title Owner	
Mailing Address 230 Ohio Street, Suite 200	City Oshkosh	State WI	ZIP Code 54902
Email Address andy@alliancedevelopment.biz	Phone Number (incl. area code) (920) 230-3628	Fax Number (incl. area code) (920) 230-6484	

SECTION 3: Project or Site Location

Project Address/Description 1360 Scheuring Road	Parcel No. WD-D0021-4/WD-D0019-1

SECTION 4: CSM Information

Existing Zoning:	Hwy 41 Business District A, PDD Overlay
Present Use of Parcel:	Vacant
Proposed Use of Lots:	Commercial

Please submit 1 hard copy and 1 PDF copy of the CSM if the property is located within the City or if the property is located within the extraterritorial jurisdiction.

SECTION 5: Certification and Permission

Certification: I hereby certify that I am the owner or authorized representative of the owner of the property which is the subject of this Permit Application. I certify that the information contained in this form and attachments is true and accurate. I certify that the project will be in compliance with all permit conditions. I understand that failure to comply with any or all of the provisions of the permit may result in permit revocation and a fine and/or forfeiture under the provisions of applicable laws.

Permission: I hereby give the City permission to enter and inspect the property at reasonable times, to evaluate this notice and application, and to determine compliance with any resulting permit coverage.

Name of Owner/Authorized Representative (please print) Andy Dumke	Title Owner	Phone Number (920) 230-3628
Signature of Applicant		Date Signed 9-8-15

TO BE COMPLETED BY CITY STAFF

CSM Review authorized by the De Pere Municipal Code, Chapter 46.	

Attachment: 2015-07-08-CSM (3742 : Scheuring Rd CSM)

CERTIFIED SURVEY MAP

FOR

NICOLET COMMERICAL DEPERE, LLC

A COMBINATION OF LOT 3 OF CERTIFIED SURVEY MAP NO. 8382, VOLUME 59, PAGE 26, AND LOT 2 OF CERTIFIED SURVEY MAP NO. 8464, VOLUME 59, PAGE 301, BEING A PART OF THE SOUTHEAST 1/4 OF THE SOUTHWEST 1/4, SECTION 29, TOWNSHIP 23 NORTH, RANGE 20 EAST, CITY OF DE PERE, BROWN COUNTY, WISCONSIN.

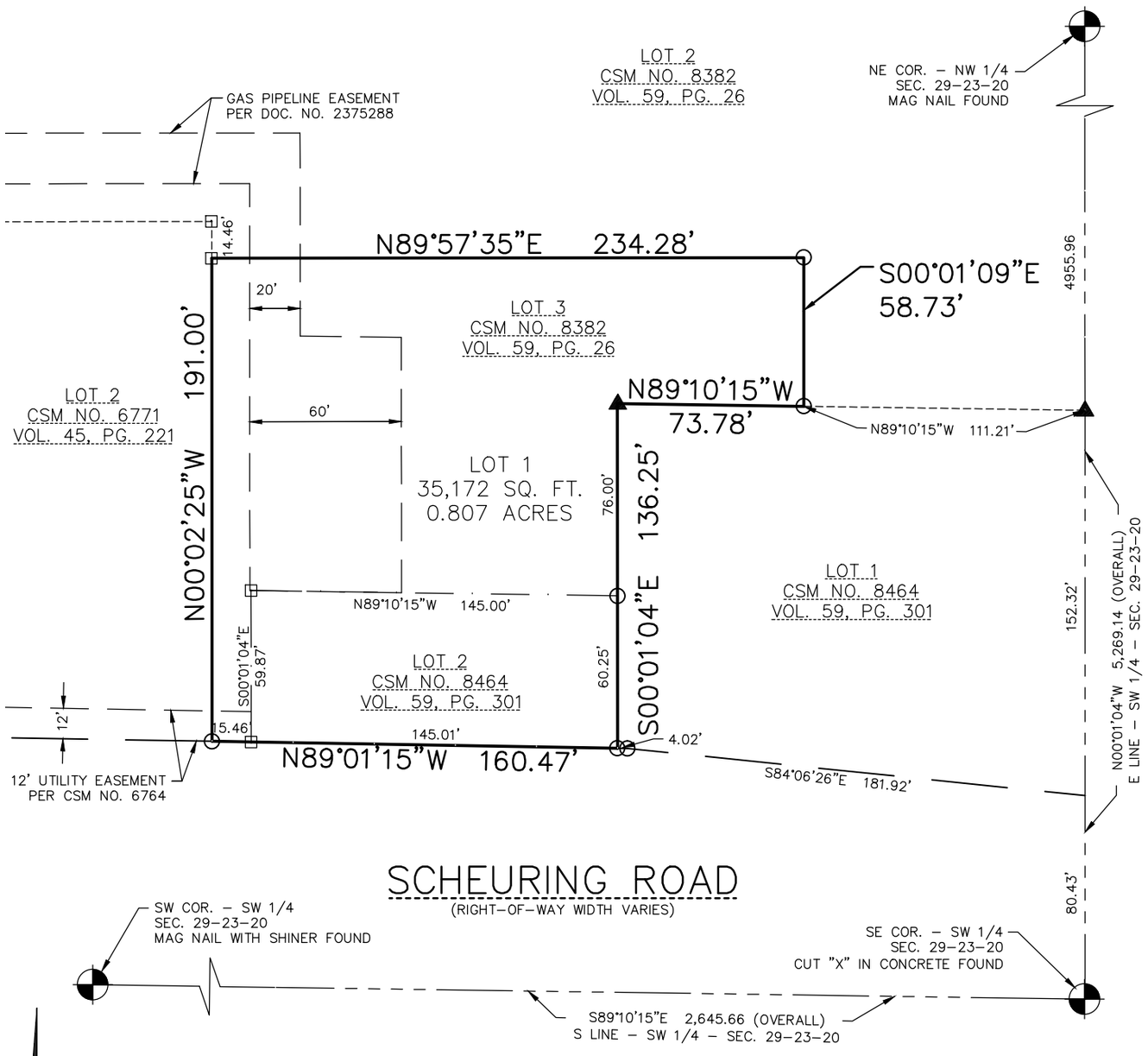

LEGEND

- ▲ – 1" IRON PIPE FOUND
- ○ – 3/4" REBAR FOUND
- ⊡ – MAG NAIL FOUND
- ⊕ – SECTION CORNER MONUMENT

NORTH POINT REFERENCED TO THE WISCONSIN COUNTY COORDINATE SYSTEM, BROWN COUNTY. THE SOUTH LINE OF THE SOUTHWEST QUARTER HAS A RECORDED BEARING OF SOUTH 89°–10'–15" EAST.

NORTH

1"= 60'

SCALE

60' 0 60' 120'

FEET

OWNER:
NICOLET COMMERICAL DEPERE, LLC
230 OHIO STREET
SUITE 200
OSHKOSH, WI 54902

SHEET 1 OF 3 SHEETS

EXCEL ENGINEERING Inc.
SURVEYING GROUP
PROJECT NO. 1513230

Always a Better Plan
100 CAMELOT DRIVE
FOND DU LAC, WI 54935
PHONE: (920) 926-9800
FAX: (920) 926-9801

CERTIFIED SURVEY MAP

A COMBINATION OF LOT 3 OF CERTIFIED SURVEY MAP NO. 8382, VOLUME 59, PAGE 26, AND LOT 2 OF CERTIFIED SURVEY MAP NO. 8464, VOLUME 59, PAGE 301, BEING A PART OF THE SOUTHEAST 1/4 OF THE SOUTHWEST 1/4 OF SECTION 29, TOWNSHIP 23 NORTH, RANGE 20 EAST, CITY OF DE PERE, BROWN COUNTY, WISCONSIN.

SURVEYOR'S CERTIFICATE

I, Ryan Wilgreen, Professional Land Surveyor, hereby certify:

That I have surveyed, divided and mapped a parcel of land described below.

That I have made such Certified Survey under the direction of Nicolet Commercial DePere, LLC, bounded and described as follows:

A combination of Lot 3 of Certified Survey Map No. 8382, recorded in Volume 59, Page 26 as Document No. 2650459 and Lot 2 of Certified Survey Map No. 8464, recorded in Volume 59, Page 301 as Document No. 2679467 in the Brown County Register of Deeds Office being a part of the Southeast 1/4 of the Southwest 1/4, Section 29, Township 23 North, Range 20 East, in the City of De Pere, Brown County, Wisconsin.

That such is a correct representation of all the exterior boundaries of the land surveyed and the subdivision thereof made.

That I have fully complied with the provisions of Section 236.34 of the Wisconsin Statutes and the Subdivision Ordinance of The City of De Pere in surveying, dividing, and mapping the same.

_____

Ryan Wilgreen, P.L.S. No. S-2647
ryan.w@excelengineer.com
Excel Engineering, Inc.
Fond du Lac, Wisconsin 54935
Project Number 1513230

Attachment: 2015-07-08-CSM (3742 : Scheuring Rd CSM)

CERTIFIED SURVEY MAP

A COMBINATION OF LOT 3 OF CERTIFIED SURVEY MAP NO. 8382, VOLUME 59, PAGE 26, AND LOT 2 OF CERTIFIED SURVEY MAP NO. 8464, VOLUME 59, PAGE 301, BEING A PART OF THE SOUTHEAST 1/4 OF THE SOUTHWEST 1/4 OF SECTION 29, TOWNSHIP 23 NORTH, RANGE 20 EAST, CITY OF DE PERE, BROWN COUNTY, WISCONSIN.

OWNER'S CERTIFICATE

Nicolet Commercial DePere, LLC, duly organized and existing under and by virtue of the laws of the State of Wisconsin, as Owner does hereby certify that said limited liability company caused the land described on this plat to be surveyed, divided, mapped, and dedicated as represented on this plat.

Nicolet Commercial DePere, LLC does further certify that this plat is required by s.236.10 or s.236.12 to be submitted to the following for approval or objection:

1. City of De Pere

WITNESS the hand and seal of said owners this _____ day of _____, 2015.

IN PRESENCE OF: Nicolet Commercial DePere, LLC

_____ _____

Witness Andy Dumke, Authorized Representative

STATE OF _____)
_____ COUNTY)SS

Personally came before me this _____ day of _____, 2015, the above named Andy Dumke to me known to be the person who executed the foregoing instrument and acknowledged the same.

_____

Notary Public, _____ County, __

My Commission Expires:_____

PLAN COMMISSION APPROVAL

RESOLVED that this certified survey map in the City of De Pere, Nicolet Commercial DePere, LLC, owner, is hereby approved by the Plan Commission of the City of De Pere.

Date _____ Approved _____

Ken Pabich, Director of Plan Commission

Attachment: 2015-07-08-CSM (3742 : Scheuring Rd CSM)

City of De Pere, Wisconsin

Request For Plan Commission Action

MEETING DATE:	**July 27, 2015**
DEPARTMENT:	**Planning**
FROM:	**Sarah Wallace**
SUBJECT:	**Review the CSM Application for an extraterritorial CSM for 2 lot CSM in the Town of Lawrence. Surveyor: Vande Hei.***

ATTACHMENTS:

- PC_Staff_July27_ExtraCSM (PDF)
- DAVE MINTEN TN LAWRENCE CSM (PDF)

Item 7: Review the CSM Application for an extraterritorial CSM for 2 lot CSM in the Town of Lawrence. Surveyor: Vande Hei.*

Mike Vande Hei has completed a CSM with two lots on Williams Grant Dr/Mid Valley Dr. Lot 1(along Mid Valley Dr.) is 6.55 acres and Lot 2, which has no road access, is 24.74 acres; the CSM indicates that Lot 2 is being purchased by the adjacent property owner (Detrie Properties, which has access to Williams Grant Dr.)

Figure 1. Location of proposed CSM.

Recommendation

Staff would recommend approval of the CSM, and that the CSM be forwarded to the Common Council for approval. The CSM needs the following corrections:

1. CSM must meet the requirements specified by Brown County Planning.
2. Certificate for City of De Pere should be Shana Defnet, City Clerk.

Attachment: PC_Staff_July27_ExtraCSM (3743 : Lawrence CSM_EXT)

Attachment: DAVE MINTEN TN LAWRENCE CSM (3743 : Lawrence CSM_EXT)

CITY OF DE PERE

APPLICATION FOR CSM REVIEW

Fee: $ 330.00
Receipt #: 104787
Date: 7-13-15

Read all instructions provided before completing. If additional space is needed, attach additional pages. Type or use black ink.

SECTION 1: Applicant / Permittee Information			
Applicant Name (Ind., Org. or Entity) Michael D. Vande Hei	Authorized Representative	Title Land Surveyor	
Mailing Address 2696 Lost Dauphin Rod	City De Pere	State WI	ZIP Code 54115
Email Address mvandehei001@new.rr.com	Phone Number (incl. area code) 920-639-1564	Fax Number (incl. area code)	

SECTION 2: Landowner Information (complete these fields when project site owner is different than applicant)			
Name (Ind. Org. or Entity) David G. Minten	Contact Person	Title Owner	
Mailing Address 2031 Orange Lane	City De Pere	State WI	ZIP Code 54115
Email Address	Phone Number (incl. area code) 920-336-9689	Fax Number (incl. area code)	

SECTION 3: Project or Site Location	
Project Address/Description APart of Lot 54 subdivision of Williams Grant	Parcel No. L-435

SECTION 4: CSM Information	
Existing Zoning:	Agriculture
Present Use of Parcel:	Agriculture and Residential
Proposed Use of Lots:	Agriculture and Residential

Please submit 1 hard copy and 1 PDF copy of the CSM if the property is located within the City or if the property is located within the extraterritorial jurisdiction.

SECTION 5: Certification and Permission

Certification: I hereby certify that I am the owner or authorized representative of the owner of the property which is the subject of this Permit Application. I certify that the information contained in this form and attachments is true and accurate. I certify that the project will be in compliance with all permit conditions. I understand that failure to comply with any or all of the provisions of the permit may result in permit revocation and a fine and/or forfeiture under the provisions of applicable laws.

Permission: I hereby give the City permission to enter and inspect the property at reasonable times, to evaluate this notice and application, and to determine compliance with any resulting permit coverage.

Name of Owner/Authorized Representative (please print)	Title	Phone Number
Michael D. Vande Hei	Land Surveyor	920-639-1564
Signature of Applicant		Date Signed

TO BE COMPLETED BY CITY STAFF	
CSM Review authorized by the De Pere Municipal Code, Chapter 46.	

CERTIFIED SURVEY MAP

PART OF LOT 54 OF THE SUBDIVISION OF WILLIAMS GRANT, TOWN OF LAWRENCE, BROWN COUNTY WISCONSIN

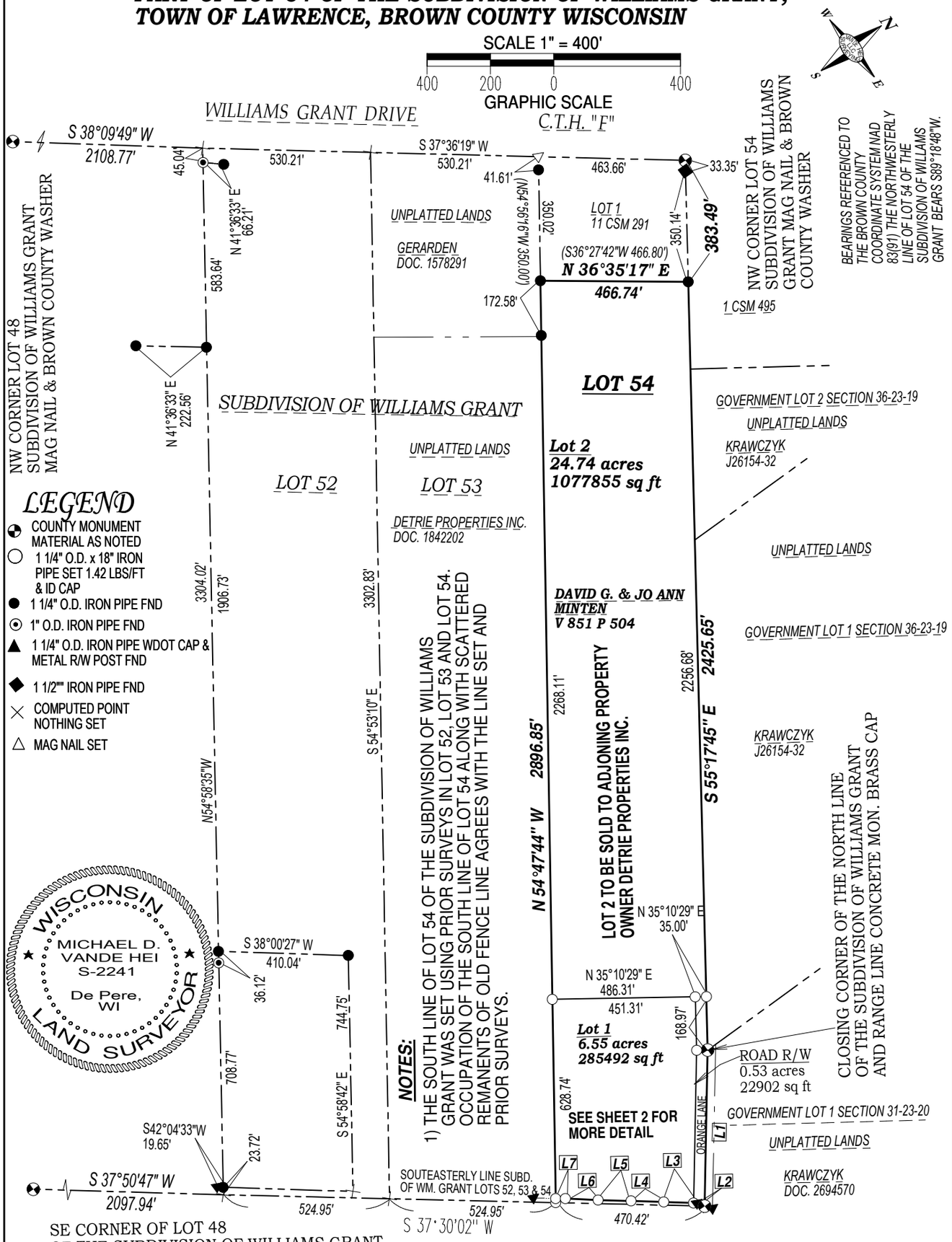

LEGEND

- COUNTY MONUMENT MATERIAL AS NOTED
- 1 1/4" O.D. x 18" IRON PIPE SET 1.42 LBS/FT & ID CAP
- 1 1/4" O.D. IRON PIPE FND
- 1" O.D. IRON PIPE FND
- 1 1/4" O.D. IRON PIPE WDOT CAP & METAL R/W POST FND
- 1 1/2"" IRON PIPE FND
- COMPUTED POINT NOTHING SET
- MAG NAIL SET

NOTES:

1) THE SOUTH LINE OF LOT 54 OF THE SUBDIVISION OF WILLIAMS GRANT WAS SET USING PRIOR SURVEYS IN LOT 52, LOT 53 AND LOT 54. OCCUPATION OF THE SOUTH LINE OF LOT 54 ALONG WITH SCATTERED REMANENTS OF OLD FENCE LINE AGREES WITH THE LINE SET AND PRIOR SURVEYS.

WISCONSIN
MICHAEL D. VANDE HEI
S-2241
De Pere, WI
LAND SURVEYOR

LINE TABLE		
Id	Bearing	Distance
L1	S 52°43'52" E	490.84'
L2	S 53°55'09" W	26.02'
L3	S 38°15'53" W	104.22'
L4	S 37°47'26" W	103.88'
L5	S 37°52'13" W	103.73'
L6	S 38°30'21" W	103.66'
L7	S 37°17'28" W	30.53'

SHEET INDEX:

SHEET 1, OVERALL LAYOUT
SHEET 2, DETAIL OF LOT 1
SHEET 3, ESA AREA AND SETBACKS LOT 1
SHEET 4, ESA NOTES AND RESTRICTIVE COVENANTS
SHEET 5, SURVEYOR'S CERTIFICATE & OWNERS CERTIFICATE
SHEET 6, ADDITIONAL CERTIFICATES

VANDEHEI SURVEYING LLC. 920-639-1564	
JOB NO.	61505
PCS FILE:	MINTEN DAVE
PREM. DATE:	6/29/2015
FINAL	

Attachment: DAVE MINTEN TN LAWRENCE CSM (3743 : Lawrence CSM_EXT)

DETAIL OF LOT 1

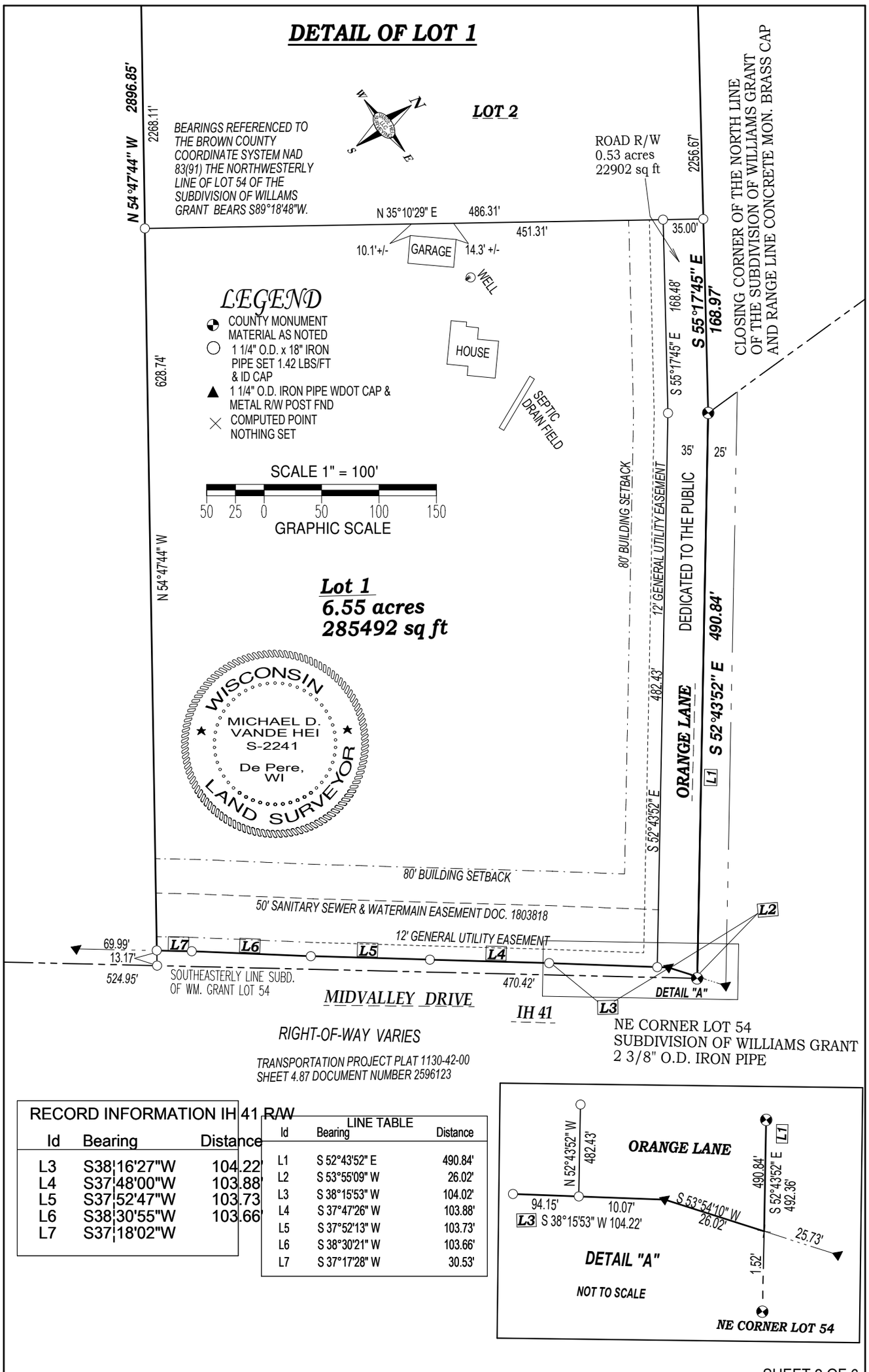

RECORD INFORMATION IH 41 R/W

Id	Bearing	Distance
L3	S38°16'27"W	104.22'
L4	S37°48'00"W	103.88'
L5	S37°52'47"W	103.73'
L6	S38°30'55"W	103.66'
L7	S37°18'02"W	

LINE TABLE

Id	Bearing	Distance
L1	S 52°43'52" E	490.84'
L2	S 53°55'09" W	26.02'
L3	S 38°15'53" W	104.02'
L4	S 37°47'26" W	103.88'
L5	S 37°52'13" W	103.73'
L6	S 38°30'21" W	103.66'
L7	S 37°17'28" W	30.53'

Attachment: DAVE MINTEN TN LAWRENCE CSM (3743 : Lawrence CSM_EXT)

ESA AREAS

SEE SHEET 4 OF 6 FOR ESA NOTES AND RESTRICTIVE COVENANTS

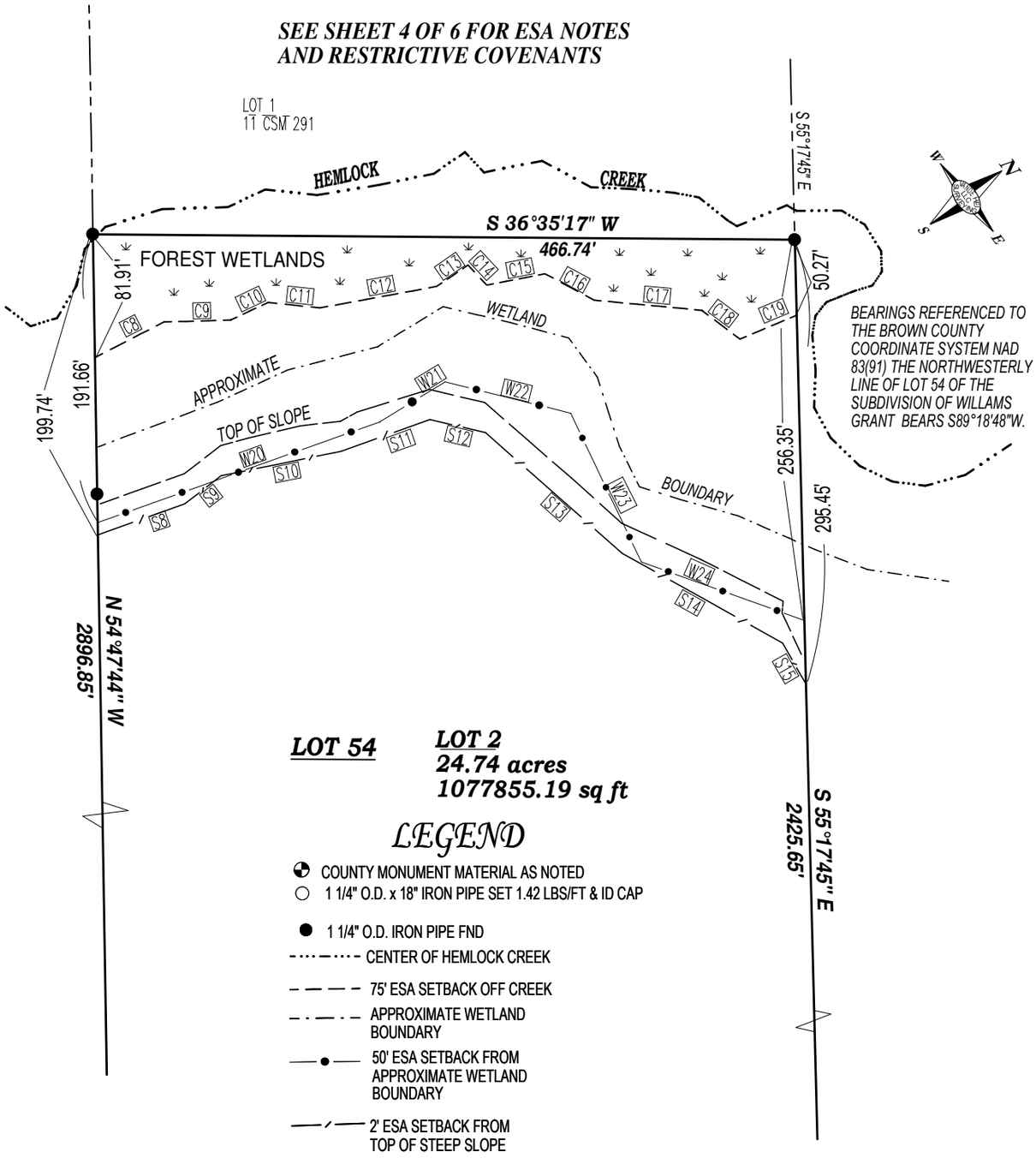

BEARINGS REFERENCED TO THE BROWN COUNTY COORDINATE SYSTEM NAD 83(91) THE NORTHWESTERLY LINE OF LOT 54 OF THE SUBDIVISION OF WILLAMS GRANT BEARS S89°18'48"W.

LOT 54

LOT 2
24.74 acres
1077855.19 sq ft

LEGEND

- COUNTY MONUMENT MATERIAL AS NOTED
- 1 1/4" O.D. x 18" IRON PIPE SET 1.42 LBS/FT & ID CAP
- 1 1/4" O.D. IRON PIPE FND
- CENTER OF HEMLOCK CREEK
- 75' ESA SETBACK OFF CREEK
- APPROXIMATE WETLAND BOUNDARY
- 50' ESA SETBACK FROM APPROXIMATE WETLAND BOUNDARY
- 2' ESA SETBACK FROM TOP OF STEEP SLOPE

75' ESA CREEK SETBACK		
Id	Bearing	Distance
C8	N 8°57'11" E	51.63'
C9	N 34°27'25" E	44.37'
C10	N 10°58'47" E	27.54'
C11	N 42°17'40" E	34.52'
C12	N 25°44'27" E	79.09'
C13	N 1°43'56" E	25.09'
C14	N 82°51'38" E	18.34'
C15	N 25°02'19" E	39.42'
C16	N 64°26'25" E	36.99'
C17	N 41°31'30" E	72.07'
C18	N 73°16'06" E	31.68'
C19	N 13°25'19" E	40.97'

20' SET BACK OFF STEEP SLOPES		
Id	Bearing	Distance
S8	N 16°35'30" E	61.34'
S9	N 1°35'18" W	30.56'
S10	N 24°39'05" E	81.24'
S11	N 16°26'53" E	62.82'
S12	N 49°25'10" E	38.05'
S13	N 77°32'52" E	121.35'
S14	N 65°21'05" E	122.09'
S15	S 83°27'36" E	31.43'

50' ESA SETBACK WETLANDS		
Id	Bearing	Distance
W20	N 16°29'53" E	198.98'
W21	N 4°45'18" E	51.09'
W22	N 50°08'32" E	86.07'
W23	S 79°16'45" E	109.49'
W24	N 55°49'33" E	115.13'

WISCONSIN
MICHAEL D. VANDE HEI
S-2241
De Pere, WI
LAND SURVEYOR

Attachment: DAVE MINTEN TN LAWRENCE CSM (3743 : Lawrence CSM_EXT)

RESTRICTIVE COVENANTS:

THE LAND ON ALL LOT LINES SHALL BE GRADED BY THE SUBDIVIDER AND MAINTAINED BY THE PROPERTY OWNER TO PROVIDE FOR ADEQUATE DRAINAGE OF SURFACE WATER.

NOTES:

NO DEVELOPEMENT SHALL OCCUR ON LOTS 1 & 2 UNTIL SUCH TIME THAT PUBLIC SEWER AND WATER IS AVAILABLE OR THE CONSTRUCTION OF STRUCTURES WHICH RELY UPON ONSITE SEWAGE DISPOSAL SYSTEMS FOR SANITARY WASTE DISPOSAL SHALL BE PROHIBITED ON LOTS 1 & 2 UNTIL ALL STATE, COUNTY AND MUNICIPAL REGULATIONS HAVE BEEN MET AND A SANITARY PERMIT HAS BEEN ISSUED BY THE BROWN COUNTY ZONING ADMINISTRATOR'S OFFICE.

THE PROPERTY OWNERS, AT THE TIME OF CONSTRUCTION, SHALL IMPLEMENT THE APPROPRIATE SOIL EROSION CONTROL METHOD OUTLINED IN "WISCONSIN CONSTRUCTION SITE BEST MANAGEMENT PRACTICE HANDBOOK" TO PREVENT SOIL EROSION. HOWEVER, IF AT THE TIME OF CONSTRUCTION THE TOWN HAS ADOPTED A SOIL EROSION CONTROL ORDINANCE IT SHALL GOVERN OVER THIS REQUIREMENT. THIS PROVISION APPLIES TO ANY GRADING, CONSTRUCTION OR INSTALLATION RELATED ACTIVITIES.

ESA NOTES AND RESTRICTIVE COVENANTS:

LOT 2 CONTAINS AN ENVIRONMENTALLY SENSITIVE AREA (ESA) AS DEFINED IN THE BROWN COUNTY SEWAGE PLAN. THE ES CLU
APPROXIMATE WETLANDS, ALL LAND WITHIN 50 FEET OF APPROXIMATE WETLANDS OF ANY SIZE, NAVIGABLE WATERWAYS, LAN
75 FEET OF THE ORDINARY HIGH WATER MARK OF NAVIGABLE WATERWAYS, STEEP SLOPES OF 12% OR GREATER ASSOCIA WIT
WATER FEATURE OR BUFFER. . DEVELOPEMENT AND LAND DISTURBING ACTIVITIES ARE RESTRICTICED IN THE ESA UNLESS END
ARE APPROVED BY THE BROWN COUNTY PLANNING
COMMISSION AND THE WISCONSIN DEPARTMENT OF NATURAL RESOURCES.

A SHORELAND PERMIT FROM THE BROWN COUNTY ZONING ADMINISTRATOR'S OFFICE IS REQUIRED FOR LOT 2 PRIOR TO AN
CONSTRUCTION, FILLING OR GRADING ACTIVITY WITHIN 300 FEET OF A STREAM.

NOTES:

THE WETLANDS ARE APPROXIMATE ON LOT 2 DUE TO THE LARGE SIZE OF THE LOT AND/OR THE LOCATION OF THE WETLAN SA.
SHOULD ANY DEVELOPMENT ON LOT 2 BE PROPOSED NEAR OR WITHIN THE APPROXIMATE WETLAND ESA, THE ACTUAL WE ND A
ESA BOUNDARY SHALL BE PROPERLY DELINEATED BY A CERTIFIED WETLAND DELINEATOR HIRED BY THE AFFECTED LAND IER.

LOT 2 INCLUDES WETLAND AREAS THAT MAY REQUIRE PERMITS FROM THE WISCONSIN DEPARTMENT OF NATURAL RESOU S, A
CORP OF ENGINEERS, BROWN COUNTY PLANNING COMMISSION, OR THE BROWN COUNTY ZONING ADMINISTRATOR'S OFFI RIO
ANY DEVELOPMENT ACTIVITY.

WISCONSIN
MICHAEL D. VANDE HEI
S-2241
De Pere, WI
LAND SURVEYOR

Attachment: DAVE MINTEN TN LAWRENCE CSM (3743 : Lawrence CSM_EXT)

SURVEYOR'S CERTIFICATE:

I, MICHAEL D. VANDE HEI, PROFESSIONAL LAND SURVEYOR, HEREBY CERTIFY: THAT I HAVE SURVEYED, DIVIDED AND MAPPED PART OF LOT 54 OF THE SUBDIVISION OF WILLIAMS GRANT, TOWN OF LAWRENCE, BROWN COUNTY, WISCONSIN MORE FULLY DESCRIBED AS FOLLOWS.

COMMENCING AT THE NORTHWEST CORNER OF SAID LOT 54 OF THE SUBDIVISION OF WILLIAMS GRANT; THENCE S55°17'45"E ALONG THE NORTHERLY LINE OF SAID LOT 54, A DISTANCE OF 383.49 FEET TO THE POINT OF BEGINNING; THENCE CONTINUING S55°17'45"E ALONG SAID NORTHERLY LINE, A DISTANCE OF 2425.65 FEET TO THE CLOSING CORNER ON THE NORTHERLY LINE OF SAID LOT 54 AND RANGE LINE BETWEEN TOWNSHIP 23 NORTH, RANGE 19 EAST AND TOWNSHIP 23 NORTH, RANGE 20 EAST; THENCE S52°43'52"E ALONG THE NORTH LINE OF SAID LOT 54, A DISTANCE OF 490.84 FEET TO THE WEST LINE OF INTERSTATE 41 (FORMERLY USH 41); THENCE THE FOLLOWING SIX (6) COURSES ALONG SAID WEST LINE, S53°55'09"W, A DISTANCE OF 26.02 FEET; THENCE S38°15'53"W, A DISTANCE OF 104.22 FEET; THENCE S37°47'26"W, A DISTANCE OF 103.88 FEET; THENCE S37°52'13"W, A DISTANCE OF 103.73 FEET; THENCE S38°30'21"W, A DISTANCE OF 103.66 FEET; THENCE S37°17'28"W, A DISTANCE OF 30.53 FEET TO THE END OF SAID COURSES AND TO THE SOUTHERLY LINE OF SAID LOT 54; THENCE N54°47'44"W ALONG SAID SOUTHERLY LINE, A DISTANCE OF 2896.85 FEET TO THE EASTERLY LINE OF LOT 1, CERTIFIED SURVEY MAP VOLUME 11 PAGE 291 OF BROWN COUNTY RECORDS; THENCE N36°35'17"E ALONG SAID EASTERLY LINE, A DISTANCE OF 466.74 FEET TO THE POINT OF BEGINNING.

SAID PARCEL CONTAINS 31.82 ACRES MORE OR LESS INCLUDING ROAD RIGHT-OF-WAY.
THE ABOVE DESCRIBED PARCEL BEING PART OF LANDS DESCRIBED IN VOLUME 851 RECORDS PAGE 504 OF BROWN COUNTY RECORDS.
SAID PROPERTY SUBECT TO ALL EXCEPTIONS, RESERVATIONS, RESTRICTIONS, CONDITIONS AND EASEMENTS CONTAINED IN PRIOR CONVEYANCES OF RECORD.

I, ALSO HEREBY CERTIFY THAT THE MAP SHOWN HEREON WAS SURVEYED UNDER MY DIRECT SUPERVISION AND THAT IT IS A TRUE REPRESENTATION THEREOF AND SHOWS THE SIZE AND LOCATION OF THE PROPERTY AND THE DIVISION OF THAT LAND, IT'S EXTERIOR BOUNDARIES, LOCATION OF ALL BOUNDARY FENCES, HIGHWAY CONVEYANCES, APPARENT EASEMENTS AND ENCROACHMENTS, IF ANY, TO THE BEST OF MY KNOWLEDGE AND BELIEF.

I FURTHER CERTIFY THAT I HAVE MADE SUCH SURVEY BY THE ORDER OF JAMES N. & NANCY L. VANDENBERG, OWNERS, AND I HAVE FULLY COMPLIED WITH SECTION 236.34 REVISED STATUTES OF WISCONSIN AND THE SUBDIVISION REGULATIONS OF BROWN COUNTY AND THE TOWN OF LAWRENCE.

_____
MICHAEL D. VANDE HEI PLS 2241 DATE

OWNER'S CERTIFICATE:

AS OWNERS, WE CERTIFY THAT WE CAUSED THE LAND DESCRIBED ON THIS CERTIFIED SURVEY MAP TO BE SURVEYED, DIVIDED, MAPPED AND DEDICATED AS REPRESENTED HEREON. WE ALSO CERTIFY THAT THIS CERTIFIED SURVEY MAP IS REQUIRED BY S.236.10 OR S.236.12 TO BE SUBMITTED TO THE FOLLOWING FOR APPROVAL OR OBJECTION: BROWN COUNTY PLANNING COMMISSION AND THE TOWN OF LAWRENCE.

_____ _____
DAVID G. MINTEN JO ANN MINTEN

STATE OF WISCONSIN

_____COUNTY

PERSONALLY CAME BEFORE ME THIS _____DAY OF _____, 2015,
THE ABOVE NAMED, DAVID G. MINTEN AND JO ANN MINTEN, TO ME KNOWN TO BE THE SAME PERSONS WHO EXECUTED THE FOREGOING INSTRUMENT AND ACKNOWLEDGED THE SAME.

_____

NOTARY PUBLIC, _____, WISCONSIN

MY COMMISSION EXPIRES _____.

Attachment: DAVE MINTEN TN LAWRENCE CSM (3743 : Lawrence CSM_EXT)

CERTIFICATE OF THE BROWN COUNTY PLANNING COMMISSION:

APPROVED BY THE BROWN COUNTY PLANNING COMMISSION THIS

_____ DAY OF_____, 2015.

_____

PETER SCHLEINZ
SENIOR PLANNER
BROWN COUNTY PLANNING COMMISSION

BROWN COUNTY TREASURER'S CERTIFICATE:

AS DULY ELECTED BROWN COUNTY TREASURER, I HEREBY CERTIFY THAT THE RECORDS IN OUR OFFICE SHOW NO UNREDEEMED TAXES AND NO UNPAID SPECIAL ASSESSMENTS AFFECTING ANY OF THE LANDS INCLUDED IN THIS CERTIFIED SURVEY MAP AS OF THE DATE LISTED BELOW.

_____ _____
PAUL D. ZELLER, BROWN COUNTY TREASURER DATE

CERTIFICATION OF THE TOWN OF LAWRENCE:

APPROVED BY THE TOWN OF LAWRENCE THIS _____ DAY OF _____ , 2015.

_____
JENNIFER MESSERSCHMIDT
LAWRENCE TOWN CLERK

CERTIFICATION OF THE CITY OF DE PERE:

APPROVED BY THE CITY OF DE PERE THIS _____ DAY OF _____, 2015.

_____
SHANA DEFNET
CITY CLERK

Office of the Register of Deeds
Brown County, Wisconsin

Received for Record _____, 20_____,

at _____o'clock _____ M and recorded as

Document # _____ in

Volume _____ of _____ on page _____.

Cathy Williquette Lindsay, Register of Deeds

Attachment: DAVE MINTEN TN LAWRENCE CSM (3743 : Lawrence CSM_EXT)